HYDRAULIC SCREW-IN VALVES PRESSURE RELIEF-DIRECT ACTING

MO-4

50 l/min 35 MPa (350 bar)

1 DESCRIPTION

Suitable for standard cavity 7/8" 14 UNF 2-way direct actiing relief valves Differential area poppet type Fast response and low hysteresis in shutting Maximum operating pressure: 350 bar Maximum flow rate: 50 l/min External parts zinc plated Steel body Poppet in tempered and grinded steel Mass 0,13 kg

2 ORDERING CODE

(1)		(2)		(3)
MO	-	4	/	

(1) MO: Direct acting relief valve

(2) 4: Nominal size

(3) Spring type:
- 10: setting 20-130 bar, Increase 16,5 bar/turn
- 16: setting 40-180 bar, Increase 16,5 bar/turn
- 32: setting 60-350 bar, Increase 51 bar/turn

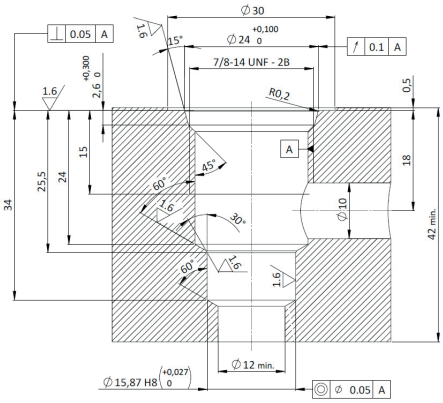

3 TYPICAL DIAGRAMS

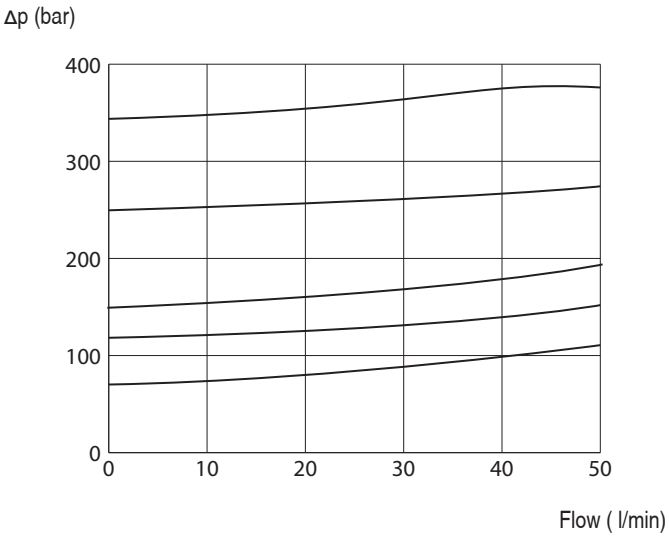

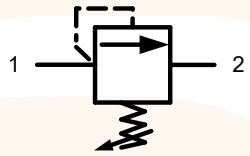

After final test the valve are respectively set to 100, 180 and 350 bar (±10%) with 5 l/min flow rate

4 INSTALLATION DIMENSIONS

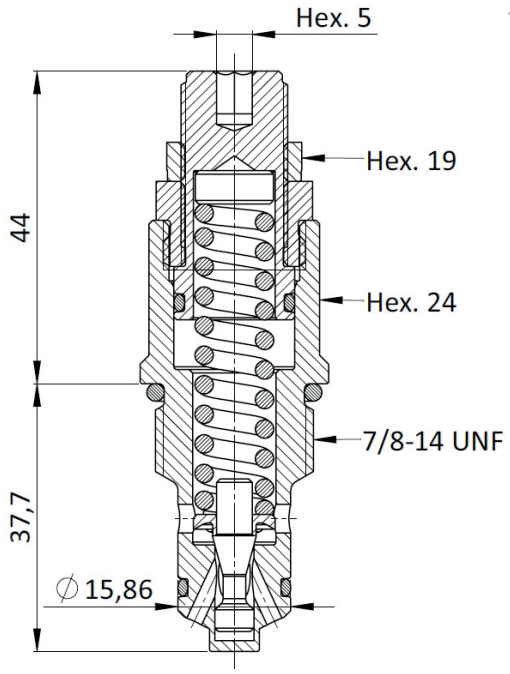

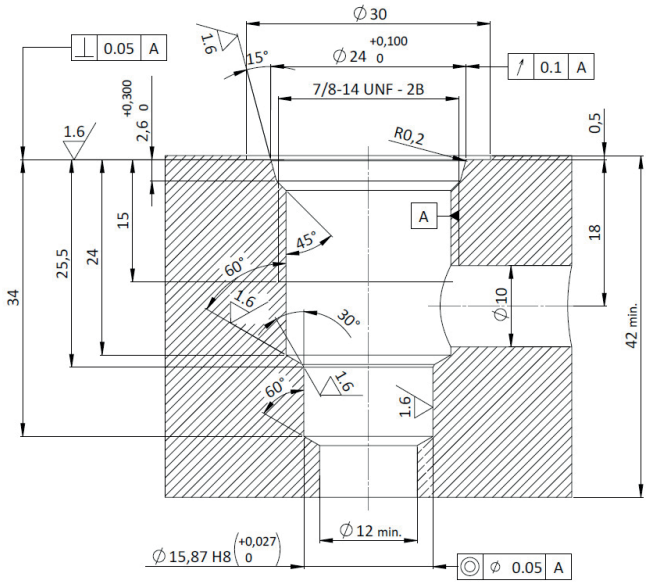

SPARE PARTS		
Position	Code	Description
1	Z0R084	O-Ring Ø 19,18 x 2,46 70Sh
2	0F.A2.001	Teflon Ring Ø 12,8 x 15,86 x 1,4
3	Z0R027	O-Ring Ø 12,42 x 1,78 70 Sh
Inner	Z0R028	O-Ring Ø 19,18 x 2,46 70 Sh

5 LINE ASSEMBLY BODY

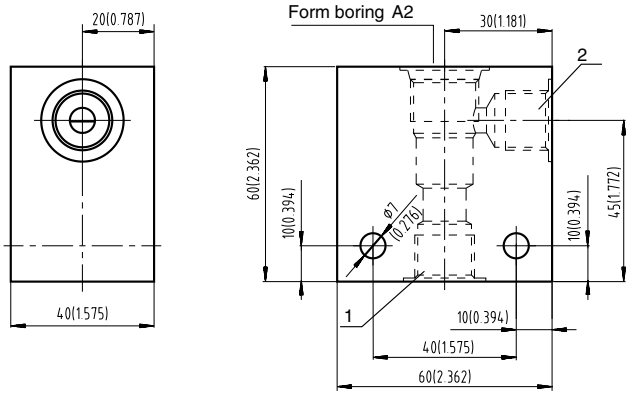

Code	Ports
LAB-78-2/38	3/8" BSP
LAB-78-2/12	1/2" BSP
MASS: 0,37 kg	

Suitable for standard 2-way screw-in valves, cavity 7/8" 14 UNF.