walvoil

DPC Series

Pre-compensated Load Sensing sectional valves

TECHNICAL CATALOGUE

walvoil
FLUID POWER E|MOTION

A member of
INTERPUMP GROUP

Additional information
This catalogue shows the product in the most standard configurations.
Please contact Sales Dpt. for more detailed information or special request.

WARNING!
All specifications of this catalogue refer to the standard product at this date.
Walvoil, oriented to a continuous improvement, reserves the right to discontinue, modify or revise the specifications, without notice.

WALVOIL IS NOT RESPONSIBLE FOR ANY DAMAGE CAUSED BY AN INCORRECT USE OF THE PRODUCT.

8th edition December 2019

The DPC Series

The DPC Series is a family of open/closed center pre-pressure compensated sectional valves designed specifically for Mobile Applications. The DPC series provides exceptional controllability, efficiency and flexibility for applications requiring up to 240 l/min (*63.4 US gpm*) flow rate. DPC Series is available in two different sizes: DPC130 (DPC130X) and DPC200.

DPC130

DPC130X

DPC200

The Load Sensing technology

Thanks to the use of specially designed pumps and control valves, the Load Sensing principle can be considered the most comprehensive means of creating a flexible hydraulic circuit that can adapt to the various operating conditions demanded by users.
The main feature of this principle is that the flow rate to the user is proportional to the spool position under any operating condition, regardless of the resistance encountered by the user (pressure) and the number of levers activated (exceeding the pump's total flow rate, a condition here in after defined as saturation, is the only limitation).
Therefore, with the LS systems, there is a specific correspondence between the position of the control lever and the movement speed of the user, cylinder or hydraulic motor. This feature is particularly useful in the hydraulic handling machine sector (excavators, cranes, loaders, agricultural and forestry machinery) in which each movement phase has specific sequences that the operator must control by using memorised movements.

Advantages and options

- Energy saving.
- Extension of part service life.
- Lower energy dissipation.
- Noise reduction.
- Available to create a single-pump circuit (compared with the use of multiple-pump circuits in which each pump is dedicated to different actuators to be operated simultaneously).

Real energy savings can be obtained above all when the DPC directional valves operate together with variable displacement Load Sensing pumps. When the DPC valve is utilised with fixed displacement pumps, the previously mentioned movement independence and repeatability features are guaranteed, but energy savings will be limited.
For special options please contact Sales Dept.

The ATEX version

The DPC130X is the DPC Series new valve built according to the ATEX directive for safe use in classified areas, with inflammable and potentially explosive materials.
Hydraulic features and performance remain the same of the DPC130 standard valve.
For more informations see code D1WWED03E catalogue.

Working conditions

This catalogue shows technical specifications and diagrams measured with mineral oil of 46 mm²/s - *46 cSt* viscosity at 40°C - *104°F* temperature.

		DPC130	DPC200
Nominal flow rating (open center circuit)	on inlet port with compensator @ stand-by (margin pressure)	150 l/min - *39.6 US gpm* @ 9 bar - *131 ps*	260 l/min - *68.7 US gpm* @ 11.5 bar - *167 ps*
	on working ports with compensator (Qin/Qut>10%) @ stand-by (margin pressure)	100 l/min - *26.4 US gpm* @ 7 bar - *102 ps*	200 l/min - *52.8 US gpm* @ 7 bar - *102 ps*
	on working ports without compensator (Qin/Qut>10%) @ stand-by (margin pressure)	130 l/min - *34.3US gpm* @ 9 bar - *131 ps*	240 l/min - *63.4 US gpm* @ 11.5 bar - *167 ps*
Max. pressure	**P** inlet port	315 bar (²) - *4500 psi* (²)	350 bar (¹) - *5100 psi* (¹)
	A and **B** working ports	315 bar (²) - *4500 psi* (²)	420 bar (¹) - *6100 psi* (¹)
Back pressure (max.)	on **T** outlet port	25 bar - *363 psi*	25 bar - *363 psi*
	on **L** drain port	2.5 bar - *36 psi*	2.5 bar - *36 psi*
Standard internal leakage A(B)->T	Δp=100 bar - *1450 psi*	16 cm³/min - *0.98 in³/min*	20 cm³/min - *1.22 in³/min*
	with port valves, Δp=100 bar - *1450 psi*	21 cm³/min - *1.28 in³/min*	25 cm³/min - *1.53 in³/min*
Fluid		Mineral oil	
Fluid temperature range	with seals NBR (BUNA-N)	from -20°C to 80°C - *from -4°F to 176°F*	
	with seals FPM (VITON)	from -20°C to 100°C - *from -4°F to 212°F*	
Viscosity	operating range	from 15 to 75 mm²/s - *from 15 to 75 cSt*	
	min.	12 mm²/s - *12 cSt*	
	max.	400 mm²/s - *400 cSt*	
Contamination level	max.	-/18/15 - ISO 4406 - *NAS 1638 class 9*	
Environmental temperature for working conditions	with mechanical devices	from -40°C to 60°C - *from -40°F to 140°F*	
	with hydraulic/pneumatic devices	from -30°C to 60°C - *from -22°F to 140°F*	
	with electric/electrohydraulic devices	from -20°C to 50°C - *from -4°F to 122°F*	

NOTES: (¹) According to NFPA T 2.6.1., fatigue rating verified for 1 million cycles on 6 sample valves with test Pressure = 1.23 x Max. pressure indicated - (²) According to NFPA T 2.6.1., fatigue rating verified for 1 million cycles on 8 sample valves with test Pressure = 1.104 x Max. pressure indicated.

Standard threads

REFERENCE STANDARD		BSP	UN-UNF	NPTF	Flange connection
THREAD ACCORDING TO		ISO 228/1 BS 2779	ISO 263 ANSI B1.1 unified	ANSI B1.20.3	ISO 6162 SAE J518
CAVITY DIMENSION ACCORDING TO	ISO	1179	11926		
	SAE		J1926	J476a	SAE J518 code 61 (3)
	DIN	3852-2, X or Y shape			ISO 6162-1 (4)

NOTES (3): Standard pressure series - (4): For pressure up to 350 bar (*5100 psi*)

PORTS THREADING	DPC130 BSP	DPC130 UN-UNF	DPC200 BSP	DPC200 UN-UNF	DPC200 Flange connection (bolts threading) ISO 6162-1 type 1	DPC200 Flange connection (bolts threading) SAE J518 code 61
P inlet	G 3/4	1 1/16-12 (SAE 12)	G 1	1 5/16-12 (SAE 16)	DN 19 (M10)	3/4 (3/8-16 UNC)
A and **B** ports	G 1/2	7/8-14 (SAE10)	G 1	1 5/16-12 (SAE 16)	DN 19 (M10)	3/4 (3/8-16 UNC)
T outlet	G 3/4	1 1/16-12 (SAE 12)	G 1-1/4	1 5/8-12 (SAE 20)	DN 25 (M10)	1 (3/8-16 UNC)
LS Load Sensing	G 1/4	9/16-18 (SAE 6)	G 1/4	9/16-18 (SAE 6)	see BSP threading	see UN-UNF threading
V1 pilot	G 1/4	9/16-18 (SAE 6)	G 1/4	9/16-18 (SAE 6)		
V2 pilot	depends on inlet section type: see pages from 14 to 17 (5)		M14x1.5 (5)			
L drain	G 1/4	7/16-20 (SAE 4)	G 1/4	7/16-20 (SAE 4)		
M pressure gauge	G 1/4	9/16-18 (SAE 6)	G 1/4	9/16-18 (SAE 6)		
Hydraulic control ports	G 1/4	9/16-18 (SAE 6)	G 1/4	9/16-18 (SAE 6)		

NOTES (5): ATTENTION! V2 pilot port requires dedicated joints; please see Inlet section pages.

Contents

DPC130

DPC200

Dimensional data and performance

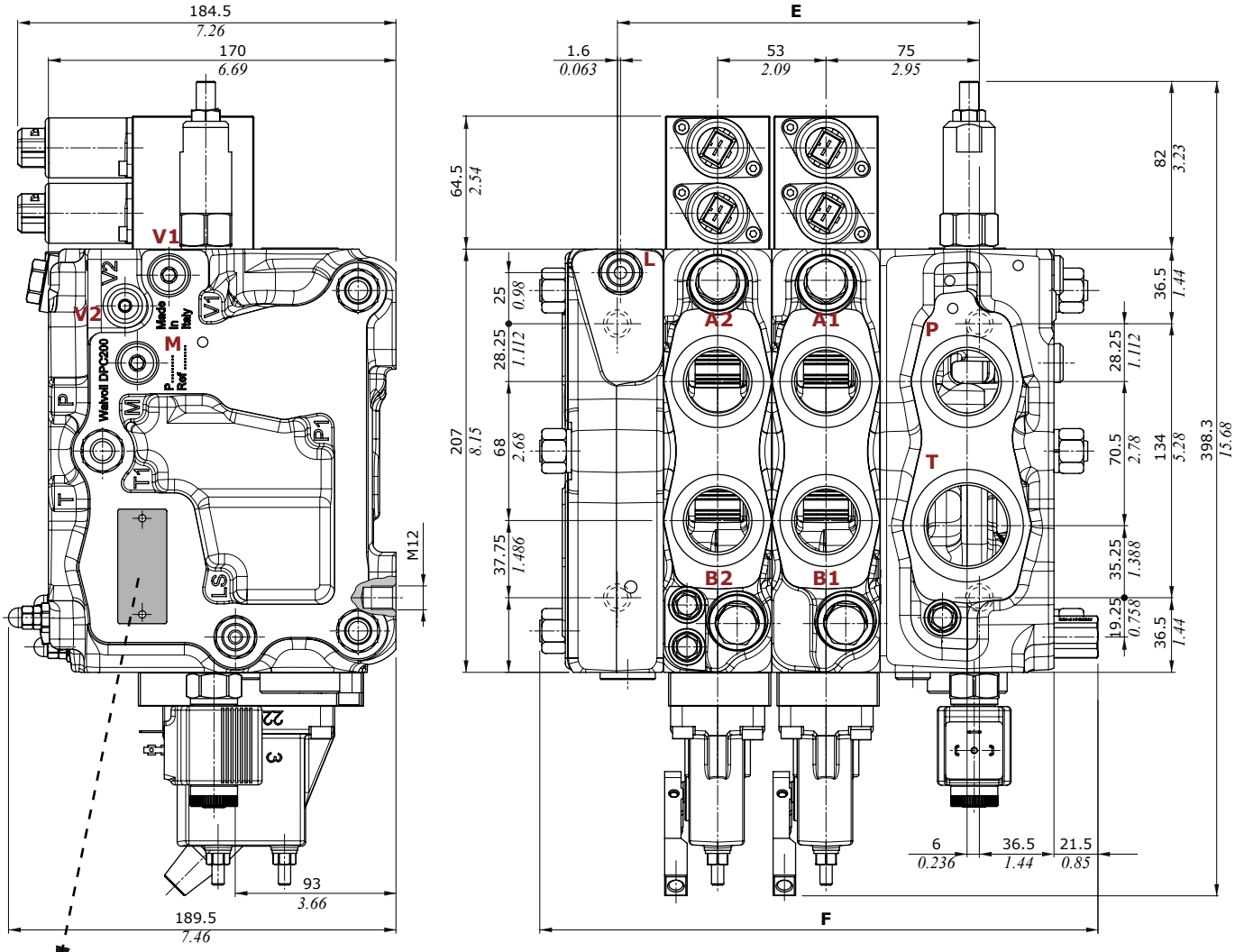

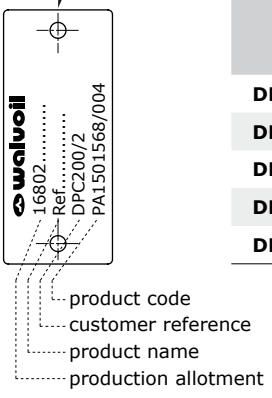

TYPE	E		F		Weight	
	mm	*in*	mm	*in*	Kg	*lb*
DPC200/1	124	*4.88*	220	*8.66*	39.5	*87.1*
DPC200/2	177	*6.97*	273	*10.75*	53.8	*117*
DPC200/3	230	*9.06*	326	*12.83*	68.1	*150*
DPC200/4	283	*11.14*	379	*14.92*	82.4	*182*
DPC200/5	336	*13.23*	432	*17.01*	96.7	*213*

TYPE	E		F		Weight	
	mm	*in*	mm	*in*	Kg	*lb*
DPC200/6	389	*15.31*	485	*19.09*	111	*245*
DPC200/7	442	*17.40*	538	*21.18*	125	*276*
DPC200/8	495	*19.49*	591	*23.27*	140	*308*
DPC200/9	548	*21.57*	644	*25.35*	154	*339*
DPC200/10	601	*23.66*	697	*27.44*	168	*371*

P⇒T Pressure drop inlet compensator (margin pressure)

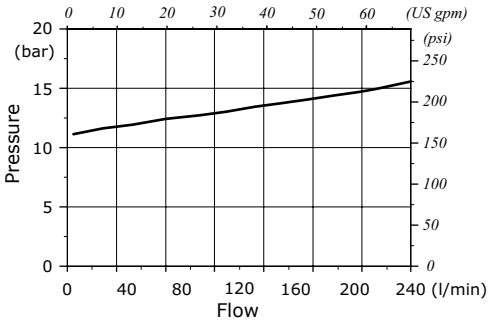

A(B)⇒T pressure drop (104 standard spool @ max.stroke)

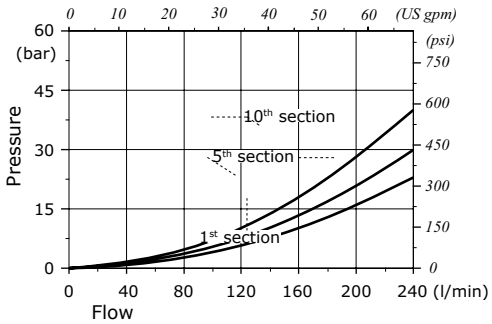

Open center configuration example

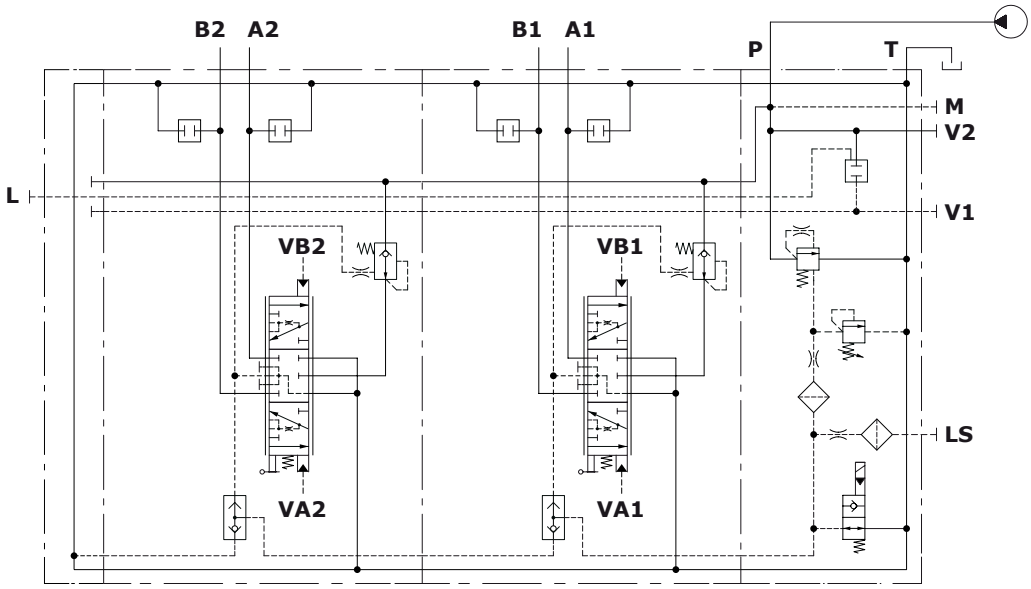

Open center circuit and proportional hydraulic control with lever, with unloader valve and port valve arrangement

Closed center configuration example

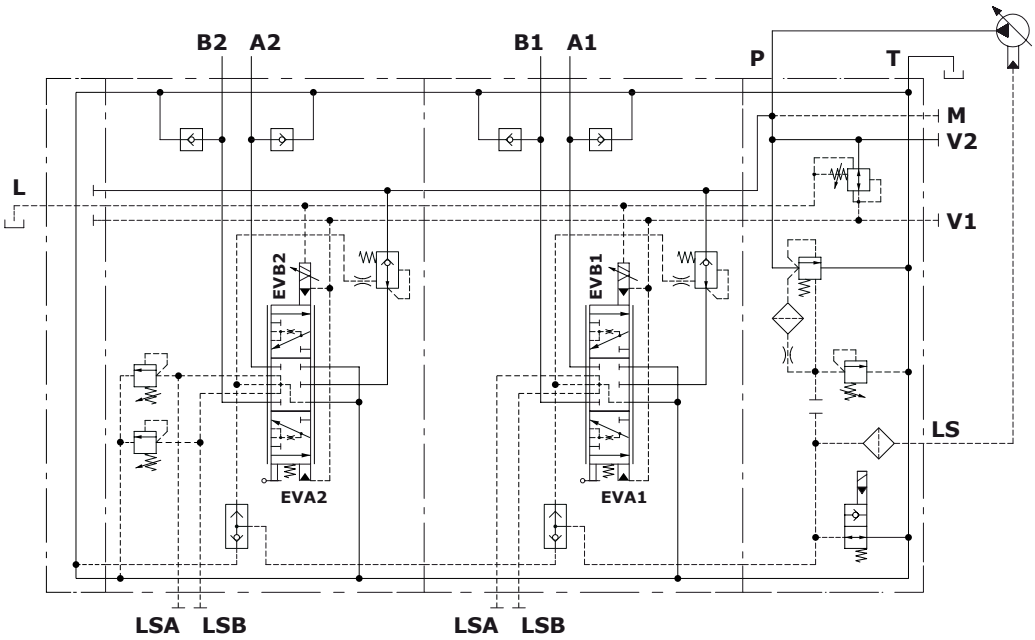

Closed center circuit and one-side proportional electrohydraulic control with lever, with unloader valve and pressure reducing valve, anticavitation valves on all ports, L.S. relief valves on 2nd section, LSA and LSB ports, internal pilot and external drain

Complete section ordering codes

DPC200/2/ BR2-10(H220\ELP) / C21-104(200\200)-8EZ3TLG1 /..... / RF30-.....-12VDC-<SB20-CVN>

Valve type

Nr. of working sections

1 2 3 4 5 6

The valve is supplied painted, as standard, with one coat of Primer black antirust paint

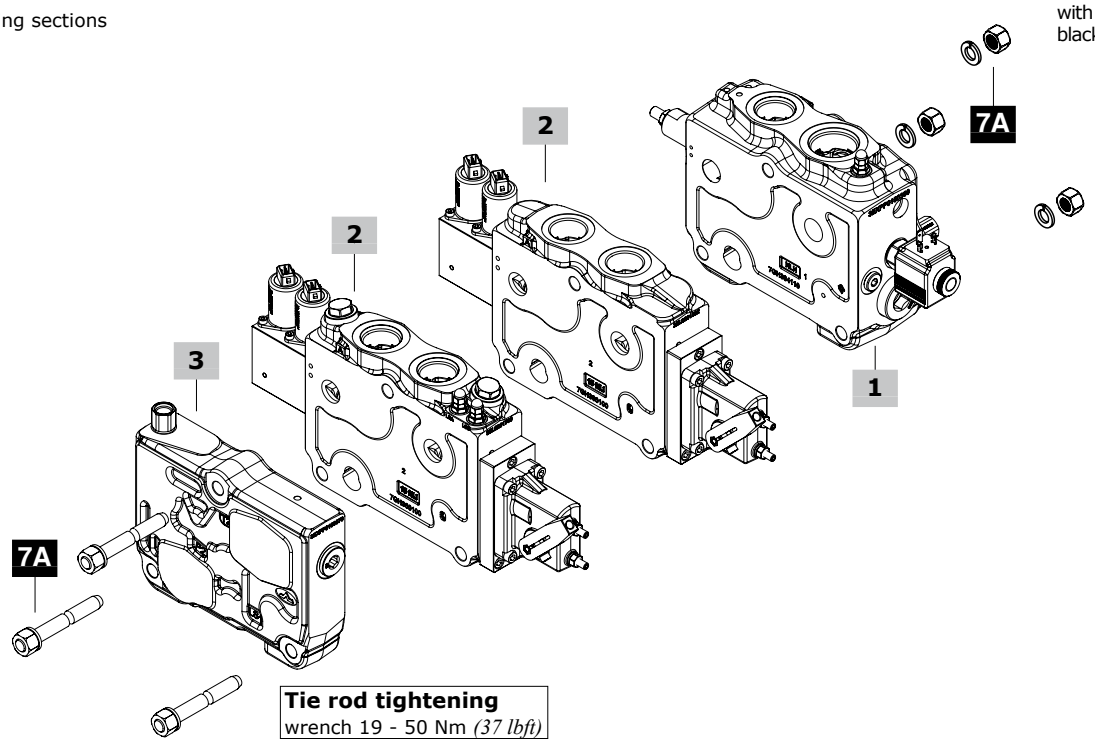

Tie rod tightening
wrench 19 - 50 Nm *(37 lbft)*

DPC200/2/ BRF2-30(H220\ELP) / C21-104(200\200)-8EZ3TLG1 /..... / RF30-.....-12VDC-<SB20-CVN>

1 2 3 4 5 6

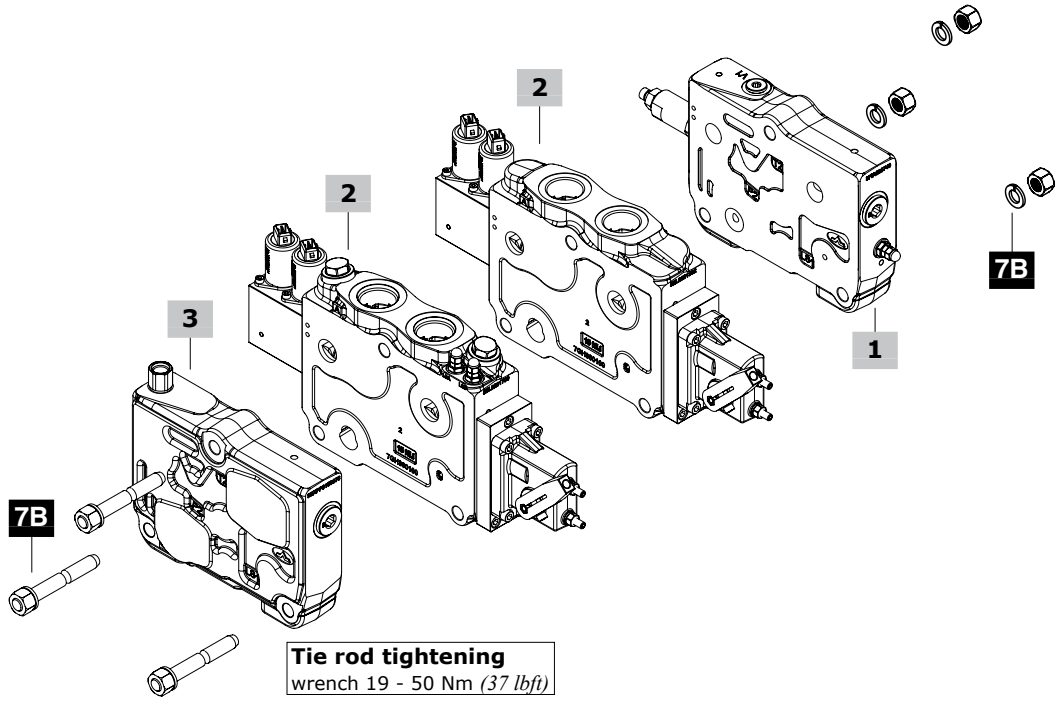

Tie rod tightening
wrench 19 - 50 Nm *(37 lbft)*

Complete section ordering codes

1 Inlet section * page 56

Closed Center circuit

TYPE: **DPC200/BR2-10(H220\ELP)-12VDC** CODE: 638203001
DESCRIPTION: With 3-way compensator, L.S. pressure relief valve and 12VDC solenoid operated unloader valve, with P-T-LS ports open

TYPE: **DPC200/BRF2-30(H220\ELP)-12VDC** CODE: 638203002
DESCRIPTION: Without compensator, with L.S. pressure relief valve and 12VDC solenoid operated unloader valve, with P-T-LS ports open

Open Center circuit

TYPE: **DPC200/BR1-10(H220\ELP)-12VDC** CODE: 638203003
DESCRIPTION: With 3-way compensator, L.S. pressure relief valve and 12VDC solenoid operated unloader valve, with P-T-LS ports open

2 Working section * page 62

TYPE: **DPC200/C10-104(200\200)-8EZ3TLG1-12VDC**
CODE: 638103001 DESCRIPTION: With 2-way comp. double acting spool for 200 l/min *(52.8 US gpm)*, prop. electrohydraulic control with lever.

TYPE: **DPC200/F32-503(150\150)-8EZ3TLG1.ULTULT.STST-12VDC**
CODE: 638103002 DESCRIPTION: With 2-way compensator, floating spool for 150 l/min *(39.5 US gpm)*, prop. electrohydraulic control with lever, arranged for "UL" size valves and L.S. relief valves, with LSA-LSB ports

3 Outlet section * page 77

For valve with mechanical control

TYPE: **DPC200/RF10** CODE: 638303001
DESCRIPTION: Without ports

For valve with hydraulic control

TYPE: **DPC200/RF20** CODE: 638303002
DESCRIPTION: Without ports, internal drain

TYPE: **DPC200/RD21** CODE: 638303004
DESCRIPTION: With P1, T1 (plugged) and LS1 ports, internal drain

For valve with electrohydraulic control

TYPE: **DPC200/RF30** CODE: 638303003
DESCRIPTION: Without ports, L external drain

TYPE: **DPC200/RD31** CODE: 638303005
DESCRIPTION: With P1, T1 (plugged) and LS1 ports, L external drain

4 Valve threading

Specify threading only if it is different from BSP standard (see page 5). For valve with ISO 6162-1 type 1 flange connection digit: **FS3-M(BSP).**

5 Voltage

Specify the voltage of electric devices.

6 Pump stand-by

This option to be specified only if valve is configured for Closed Center circuit, without local compensation and if the value is different from 11.5 bar *(167 psi)*

7A Assembling kit

For valve with BR inlet section

CODE	DESCRIPTION
5TIR112215	For 1 working section valve
5TIR112268	For 2 working section valve
5TIR112321	For 3 working section valve
5TIR112374	For 4 working section valve
5TIR112427	For 5 working section valve
5TIR112480	For 6 working section valve
5TIR112533	For 7 working section valve
5TIR112586	For 8 working section valve
5TIR112639	For 9 working section valve
5TIR112692	For 10 working section valve

7B Assembling kit

For valve with BRF inlet section

CODE	DESCRIPTION
5TIR112175	For 1 working section valve
5TIR112228	For 2 working section valve
5TIR112281	For 3 working section valve
5TIR112334	For 4 working section valve
5TIR112387	For 5 working section valve
5TIR112440	For 6 working section valve
5TIR112493	For 7 working section valve
5TIR112546	For 8 working section valve
5TIR112599	For 9 working section valve
5TIR112652	For 10 working section valve

Inlet section part ordering codes

Valve setting (bar)

DPC200 / BR1 - 1 0 (H220\ELP\SB15)-.....-12VDC

1 2 3 5 6 4 7 8

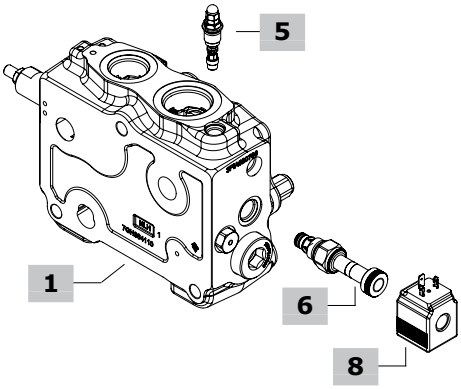

DPC200/BR2 - 1 0 (H220\ELP)-.....-12VDC

1 2 3 5 6 7 8

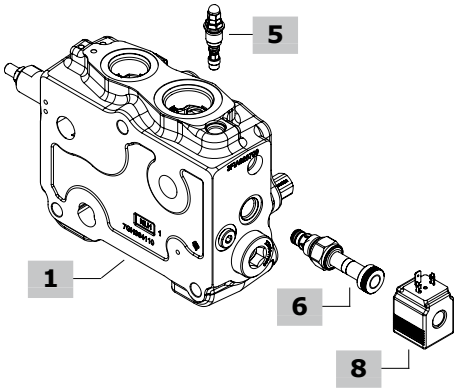

DPC200/BRF2 - 3 0 (H220\ELP)-.....-12VDC

1 2 3 5 6 7 8

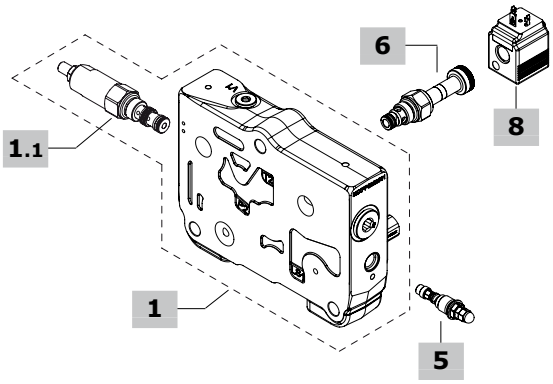

Circuit conversion kit

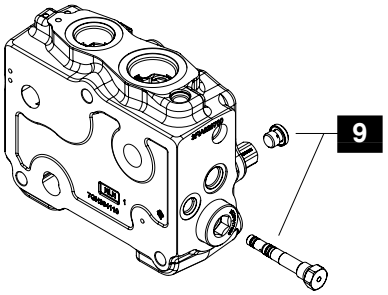

Inlet section part ordering codes

1 Inlet section body kit* page 58

Open Center circuit

TYPE: **DPC200/BR1-1** CODE: 5FIA620302
DESCRIPTION: With compensator and pressure reducing valve, P-T-LS ports (LS plugged), arranged for unloader valve

TYPE: **DPC200/BR1-1-FS3-M(BSP)** CODE: 5FIA620303
DESCRIPTION: As previous one, with ISO 6162-1 type 1 flange connection

TYPE: **DPC200/BN1-1** CODE: 5FIA620309
DESCRIPTION: With compensator, P-T-LS ports (LS plugged), arranged for pressure reducing valve (seat plugged) and unloader valve

Closed Center circuit

TYPE: **DPC200/BR2-1** CODE: 5FIA620304
DESCRIPTION: With compensator and pressure reducing valve, P-T-LS ports, arranged for unloader valve

TYPE: **DPC200/BR2-1-FS3-M(BSP)** CODE: 5FIA620305
DESCRIPTION: As previous one, with ISO 6162-1 type 1 flange connection

TYPE: **DPC200/BN2-1** CODE: 5FIA620300
DESCRIPTION: With compensator, P-T-LS ports, arranged for pressure reducing valve (seat plugged) and unloader valve

TYPE: **DPC200/BRF2-3** CODE: 5FIA620306
DESCRIPTION: Without compensator, with pressure reducing valve, P-T-LS ports, arranged for unloader valve

TYPE: **DPC200/BRF2-3-FS3-M(BSP)** CODE: 5FIA620307
DESCRIPTION: As previous one, with ISO 6162-1 type 1 flange connection

TYPE: **DPC200/BNF2-3** CODE: 5FIA620310
DESCRIPTION: Without compensator, with P-T-LS ports, arranged for pressure reducing valve (seat plugged) and unloader valve

1.1 Particolari page 60

They are included in BRF inlet section ordering code

CODE	DESCRIPTION
4AC9539900A	Pressure reducing valve, setting 32 bar *(460 psi)*
3XTP3535100	Pressure reducing valve blanking plug

2 Port arrangement

TYPE	DESCRIPTION
1	With upper T and P ports (for BR/BN sections)
2	With upper and side T and P ports (for BR/BN sections)
3	With side T and P ports (for BRF section)

3 Port options

TYPE	DESCRIPTION
0	P and T open ports
1	P port open, T port plugged

4 Compensator stanb-by

Specify value only if it is different from the standard (11.5 bar - *167 psi*): for Open Center sections

5 L.S. pressure relief valve page 61

Standard setting is referred to 10 l/min *(2.6 US gpm)* flow.

TYPE	ID	CODE	DESCRIPTION
LSD	**S**	XCAR126215	With blind nut, range 40-180 bar *(580-2600 psi)*, standard setting 90 bar *(1300 psi)*
		XCAR126213	Range 180-350 bar *(2600-5100 psi)*, standard setting 180 bar *(2600 psi)*
LSH	**H**	XCAR126216	With locked arrangement, range 40-180 bar *(580-2600 psi)*, std setting 90 bar *(1300 psi)*
		XCAR126217	Range 180-350 bar *(2600-5100 psi)*, standard setting 180 bar *(2600 psi)*
LSZ	**Z**	5CAR126221	With anti-tamper cap, range 40-180 bar *(580-2600 psi)*, std setting 90 bar *(1300 psi)*
		5CAR126219	Range 180-350 bar *(2600-5100 psi)*, standard setting 180 bar *(2600 psi)*
ST	**ST**	5KIT126210	Relief valve blanking plug

6 Solenoid operated L.S. unloading valve page 60

BER type coil to be used: please see chapter 8

TYPE	CODE	DESCRIPTION
ELN	0EC08002031	Without emergency override
ELP	0EC08002033	With push-button emergency override
ELT	0EC08002035	With "twist & push" emergency override
ELV	0EC08002034	With screw type emergency override
LT	XTAP510320	Unloading valve blanking plug

7 Section threading

Specify threading only if it is different from BSP standard.
For section with ISO 6162-1 type 1 flange connection digit: **FS3-M(BSP).**

8 Coil

TYPE	CODE	DESCRIPTION
12VDC	4SLE001200	**BER** type coil**,** ISO4400 conn., 12VDC

For complete available coil list please see page 82.

9 Circuit conversion kit

These kits are NOT available for BRF section.

CODE	DESCRIPTION
5KIT200311	For circuit conversion from Open Center to Closed Center; from BR1/BN1 to BR2/BN2 sections
5KIT200310*	Kit for circuit conversion from Closed Center to Open Center; from BR2/BN2 to BR1/BN1 sections

NOTE (*): *Codes are referred to **BSP** thread.*

Inlet section

Dimensions and hydraulic circuit

Example of BR section type

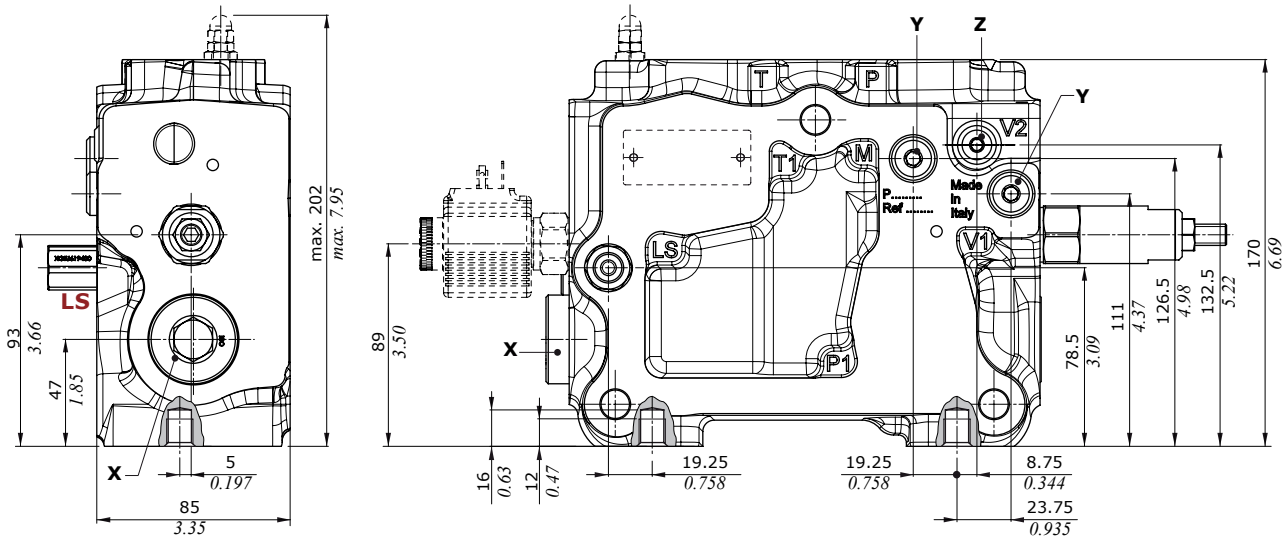

Auxiliary port specification

M = G1/4 pressure gauge connection

V1 = G1/4 pilot pressure port (Pmax = 30 bar - *435 psi*) for hydraulic pilot control valve feeding (P⇒OUT)

V2 = M14x1.5 pilot pressure port for electrohydraulic control optional feeding (Pmax = 315 bar - *4600 psi*) (P⇒IN): G1/4 joint is required, code 5GIU519611.

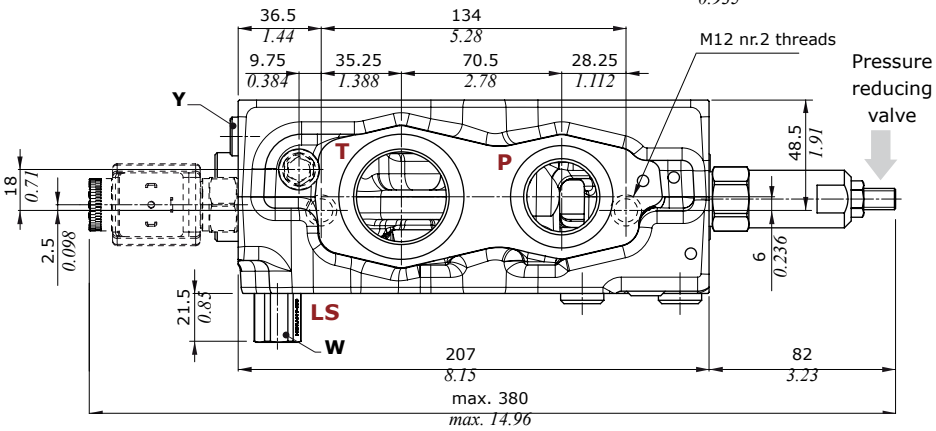

Closed center BR2-10(H220\ELN) configuration example

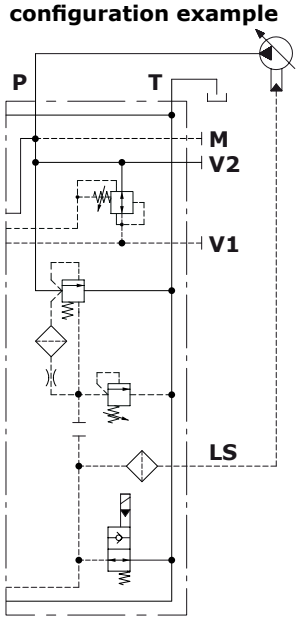

Open center BR1-10(H220\ELN) configuration example

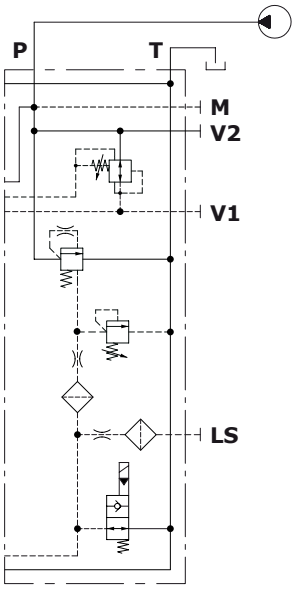

Wrenches and tightening torque

X = allen wrench 17 - 90 Nm *(66 lbft)*

Y = allen wrench 6 - 24 Nm *(17.7 lbft)*

Z = allen wrench 5 - 24 Nm *(17.7 lbft)*

W = wrench 19 - 24 Nm *(17.7 lbft)*

NOTE: for valves wrench and torque please see pages 60-61.

FS3-M(BSP) optional connection

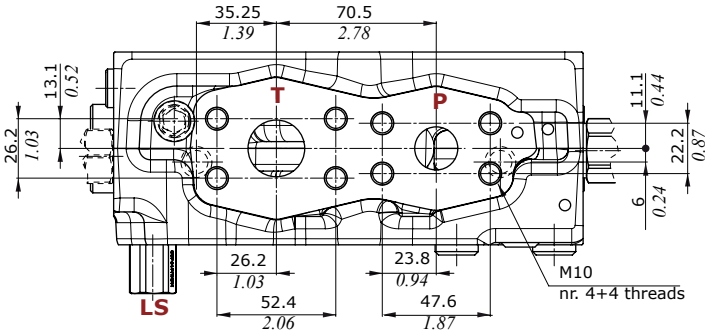

Dimensions and hydraulic circuit

Example of BRF section type

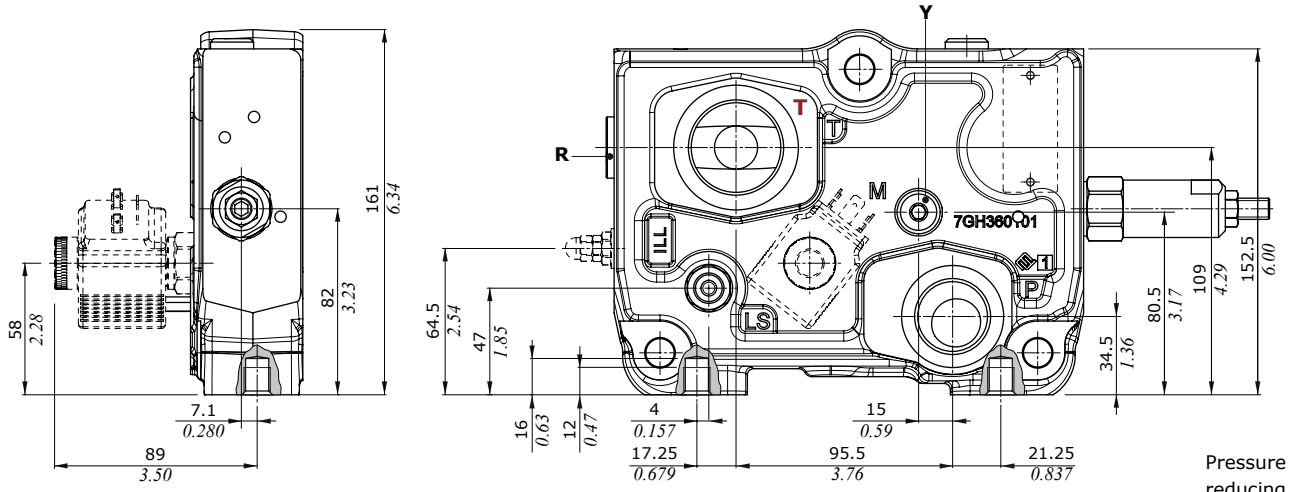

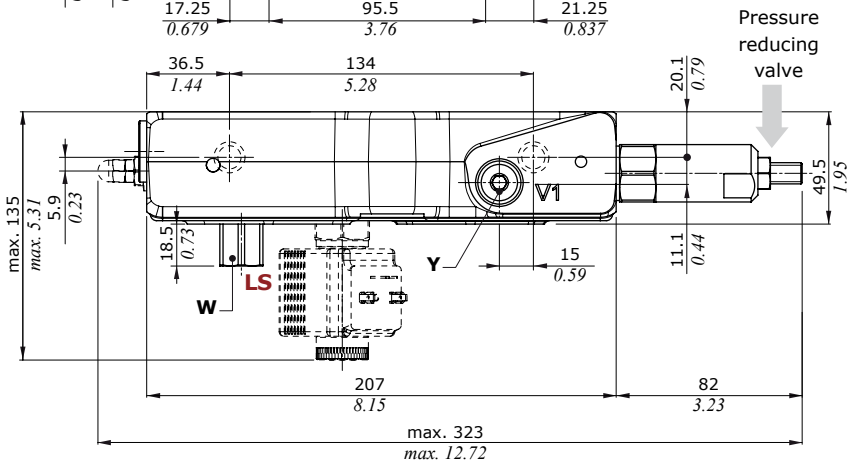

Auxiliary port specification

M = G1/4 pressure gauge connection

V1 = G1/4 pilot pressure port (Pmax = 30 bar - *435 psi*) for hydraulic pilot control valve feeding (P⇒OUT)

Wrenches and tightening torque

R = allen wrench 10 - 24 Nm *(17.7 lbft)*

Y = allen wrench 6 - 24 Nm *(17.7 lbft)*

W = wrench 19 - 24 Nm *(17.7 lbft)*

NOTE: for valves wrench and torque please see pages 60-61.

BRF2-30(H220\ELN) configuration

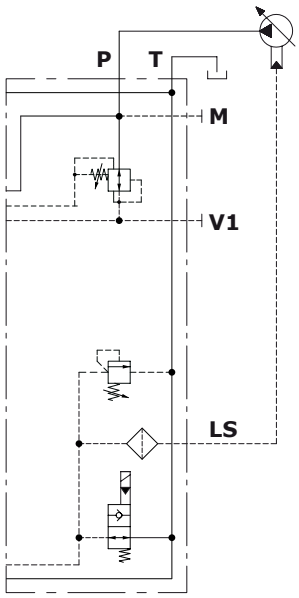

BRF2-30(H220\ELT\RT) configuration

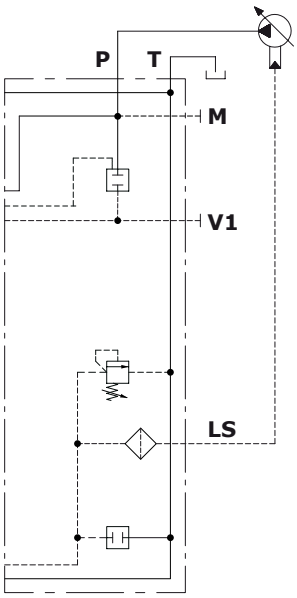

FS3-M(BSP) optional connection

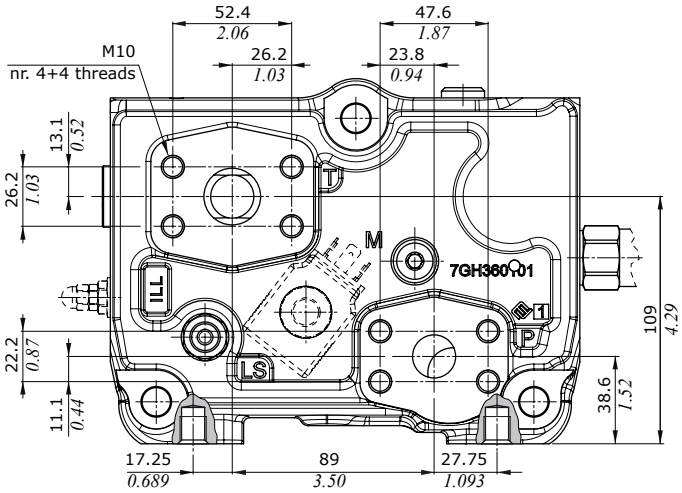

Inlet section

Pressure reducing valve

Pressure reducing valve

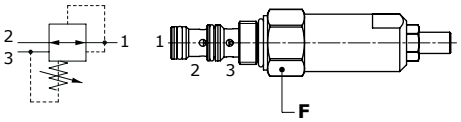

Valve blanking plug

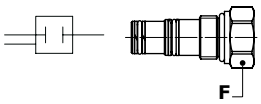

On BR section

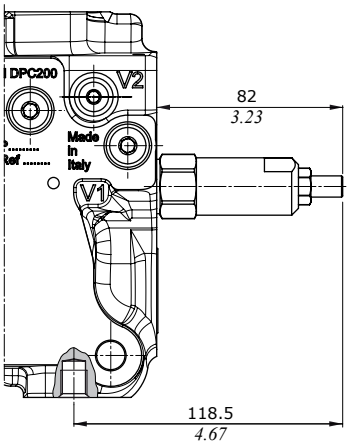

On BRF section

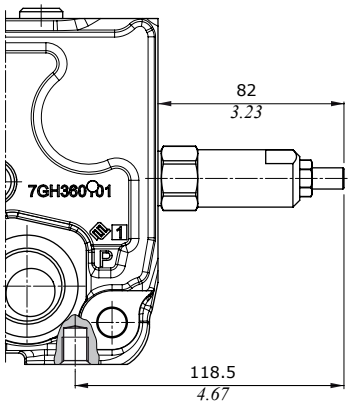

Reduced pressure vs. Flow

Standard setting 32 bar *(460 psi)*

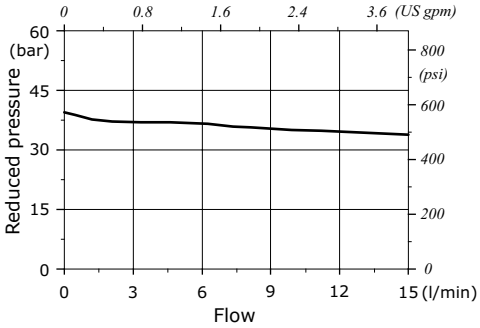

Features

Reduced press. range . : from 3.5 to 35 bar *(from 50 to 500 psi)*
Max. inlet pressure . . . : 420 bar *(6100 psi)*
Nominal flow . . . . . : 15 l/min *(4 US gpm)*

Wrenches and tightening torques

F = wrench 24 - 30 Nm *(22 lbf)*

Solenoid operated L.S. unloading valve

ELN

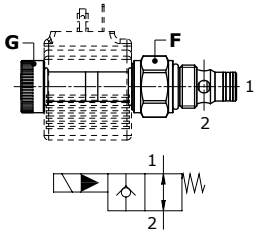

ELP

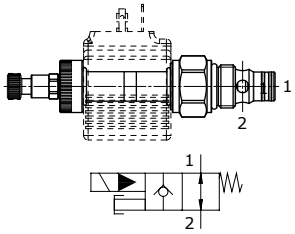

ELV

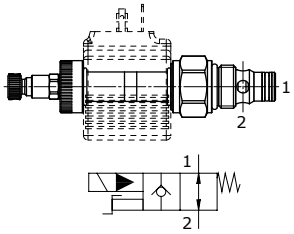

ELT

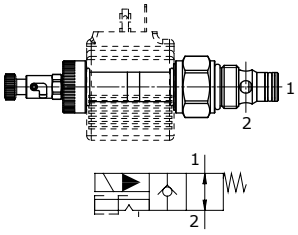

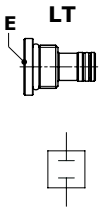

On BR section

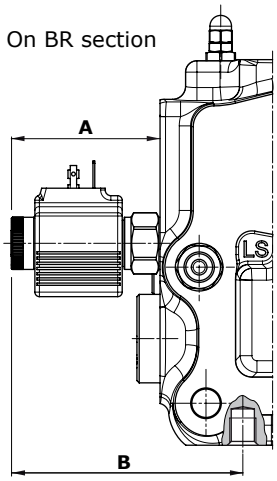

On BRF section

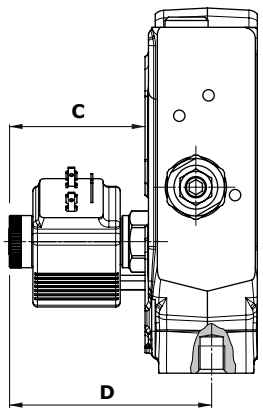

Wrenches and tightening torques

F = wrench 24 - 30 Nm *(22 lbf)*
G = manual tightening
E = wrench 10 - 24 Nm *(17.7 lbf)*

Legenda

ELN: without emergency
ELP: push button emergency override
ELV: screw emergency override
ELT: "push&twist" emergency override
LT: valve blanking plug

Features

Max. flow . . . . . : 40 l/min *(10.6 US gpm)*
Max. pressure. . . . : 380 bar *(5500 psi)*
Internal leakage . . : 0.25 cm³/min @ 210 bar *(0.015 in³/min @ 3050 psi)*

For coil features and **BER** type coil options please see at page 83.

Valve type	BR section				BRF section			
	A		B		C		D	
	mm	*in*	mm	*in*	mm	*in*	mm	*in*
ELN	65.5	*2.58*	102	*4.02*	60	*2.36*	89	*3.50*
ELP	88.5	*3.48*	125	*4.92*	83	*3.27*	112	*4.41*
ELV	88.5	*3.48*	125	*4.92*	83	*3.27*	112	*4.41*
ELT	91	*3.58*	127.5	*5.02*	85.5	*3.37*	114.5	*4.51*

L.S. pressure relief valve

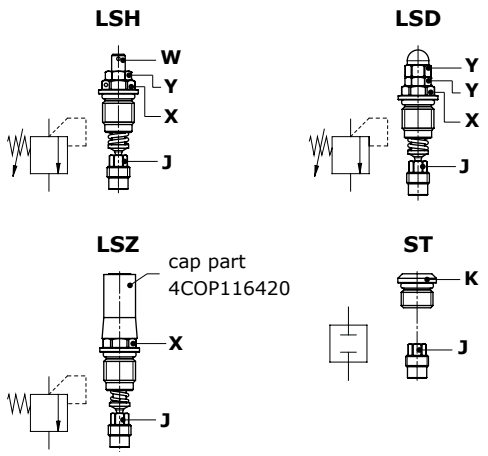

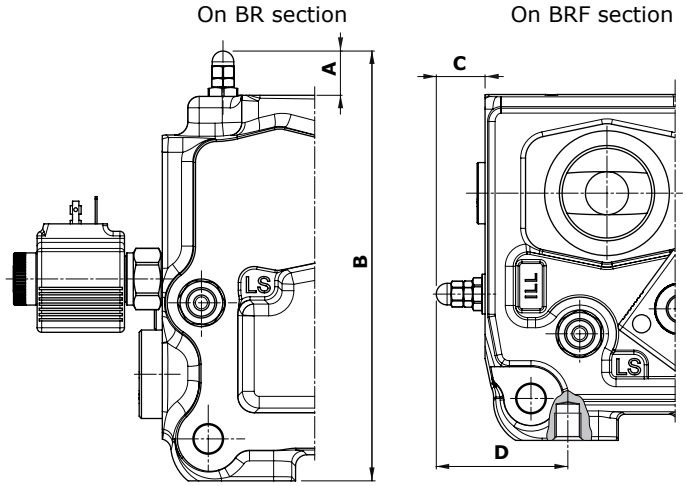

Legenda

LSH: with lock arrangement
LSD: with blind nut
LSZ: with anti-tamper cap
ST: valve blanking plug

Wrenches and tightening torques

X = wrench 13 - 24 Nm *(17.7 lbf)*
Y = wrench 10 - 9.8 Nm *(7.2 lbf)*
W = allen wrench 3
J = wrench 7 - 24 Nm *(17.7 lbf)*
K = allen wrench 5 - 24 Nm *(17.7 lbf)*

Valve type	BR section				BRF section			
	A		B		C		D	
	mm	*in*	mm	*in*	mm	*in*	mm	*in*
LSD	19.5	*0.77*	189.5	*7.46*	21.5	*0.85*	58	*2.28*
LSH	15	*0.59*	185	*7.28*	16	*0.63*	52.5	*2.07*
LSZ	32	*1.26*	202	*7.95*	34	*1.34*	70.5	*2.78*

Pressure vs. flow diagram

(1) = valve range 40-180 bar *(580-2600 psi)*
(2) = valve range 180-350 bar *(2600-5000 psi)*

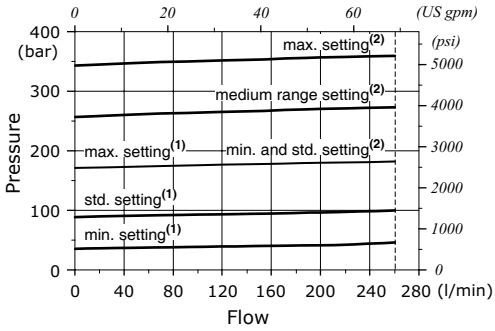

Working section part ordering codes

Flow on A\B ports (l/min) — Valve setting (bar): A port B port A port B port

DPC200 / C22 - 104 (200\200) - 8EZ3T LG 1 . U100U320 . S250S250 - ..... - 12VDC

1 2 3A 3B 4 5 6 7 3

Lever position: please see page 74

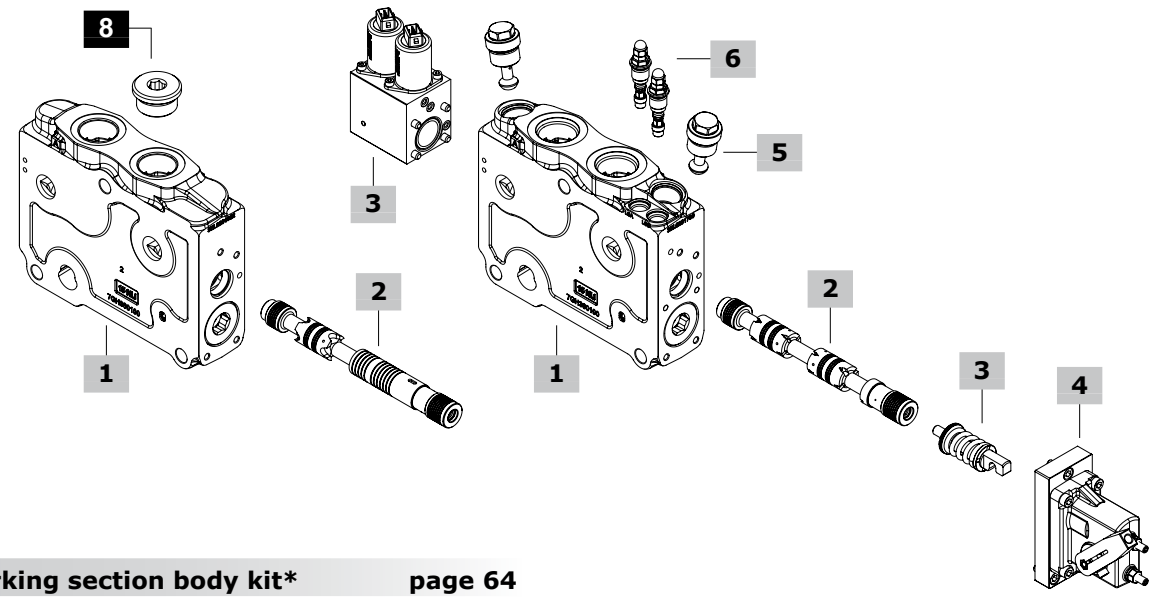

1 Working section body kit* page 64

With compensator

TYPE: **DPC200/C10** CODE: 5EL6201310
DESCRIPTION: Without valve arrangement
TYPE: **DPC200/C10-FS3-M** CODE: 5EL6209210
DESCRIPTION: As previous one, with ISO 6162-1 type 1 flange connect.
TYPE: **DPC200/C11** CODE: 5EL6201311
DESCRIPTION: Without valve arrangement, with LSA-LSB ports
TYPE: **DPC200/C11-FS3-M(BSP)** CODE: 5EL6209211
DESCRIPTION: As previous one, with ISO 6162-1 type 1 flange connect.
TYPE: **DPC200/C22** CODE: 5EL6201322
DESCRIPTION: Arranged for "U" size valves and L.S. relief valves, with LSA-LSB ports
TYPE: **DPC200/C22-FS3-M(BSP)** CODE: 5EL6209222
DESCRIPTION: As previous one, with ISO 6162-1 type 1 flange connect.
TYPE: **DPC200/C32** CODE: 5EL6201332
DESCRIPTION: Arranged for "UL" size valves and L.S.relief valves, with LSA-LSB ports
TYPE: **DPC200/C32-FS3-M(BSP)** CODE: 5EL6209232
DESCRIPTION: As previous one, with ISO 6162-1 type 1 flange connect.
TYPE: **DPC200/F32** CODE: 5EL6204332
DESCRIPTION: As Type C32, for floating circuit
TYPE: **DPC200/F32-FS3-M(BSP)** CODE: 5EL6209232F
DESCRIPTION: As previous one, with ISO 6162-1 type 1 flange connect.

Without compensator, with check valve

TYPE: **DPC200/CV32** CODE: 5EL6201332A
DESCRIPTION: Arranged for "UL" size valves and L.S. relief valves, with LSA-LSB ports
TYPE: **DPC200/CV32-FS3-M(BSP)** CODE: 5EL6209232A
DESCRIPTION: As previous one, with ISO 6162-1 type 1 flange connect.
TYPE: **DPC200/FV32** CODE: 5EL6204332A
DESCRIPTION: For floating circuit, arranged for "UL" size valves and L.S. relief valves, with LSA-LSB ports
TYPE: **DPC200/FV32-FS3-M(BSP)** CODE: 5EL6209232FA
DESCRIPTION: As previous one, with ISO 6162-1 type 1 flange connect.

2 Spool page 66

Flow is referred to 7 bar *(102 psi)* stand-by (margin pressure)

TYPE	CODE	DESCRIPTION
Double acting with A and B closed in neutral position		
105	3CU4510025	25 l/min *(6.6 US gpm)* flow
101	3CU4510051	50 l/min *(13.2 US gpm)* flow
106	3CU4510075	75 l/min *(19.8 US gpm)* flow
102	3CU4510101	100 l/min *(26.4 US gpm)* flow
107	3CU4510125	125 l/min *(33 US gpm)* flow
103	3CU4510151	150 l/min *(39.5 US gpm)* flow
108	3CU4510175	175 l/min *(46.2 US gpm)* flow
104	3CU4510201	200 l/min *(52.8 US gpm)* flow
Double acting with A and B to tank in neutral position		
205	3CU4524025	25 l/min *(6.6 US gpm)* flow
201	3CU4524050	50 l/min *(13.2 US gpm)* flow
206	3CU4524075	75 l/min *(19.8 US gpm)* flow
202	3CU4524100	100 l/min *(26.4 US gpm)* flow
207	3CU4524125	125 l/min *(33 US gpm)* flow
203	3CU4524150	150 l/min *(39.5 US gpm)* flow
208	3CU4524175	175 l/min *(46.2 US gpm)* flow
204	3CU4524200	200 l/min *(52.8 US gpm)* flow
Double acting with A and B partially to tank in neutral position		
2H05	3CU4525025	25 l/min *(6.6 US gpm)* flow
2H01	3CU4525050	50 l/min *(13.2 US gpm)* flow
2H06	3CU4525075	75 l/min *(19.8 US gpm)* flow
2H02	3CU4525100	100 l/min *(26.4 US gpm)* flow
2H07	3CU4525125	125 l/min *(33 US gpm)* flow
2H03	3CU4525150	150 l/min *(39.5 US gpm)* flow
2H08	3CU4525175	175 l/min *(46.2 US gpm)* flow
2H04	3CU4525200	200 l/min *(52.8 US gpm)* flow

.....to be continued

NOTE (*): *Codes are referred to **BSP** thread.*

Working section part ordering codes

2 Spool page 66

TYPE	CODE	DESCRIPTION
Single acting on A, B plugged: G1 plug is required		
305	3CU4530025	25 l/min *(6.6 US gpm)* flow
301	3CU4530050	50 l/min *(13.2 US gpm)* flow
306	3CU4530075	75 l/min *(19.8 US gpm)* flow
302	3CU4530100	100 l/min *(26.4 US gpm)* flow
307	3CU4530125	125 l/min *(33 US gpm)* flow
303	3CU4530150	150 l/min *(39.5 US gpm)* flow
308	3CU4530175	175 l/min *(46.2 US gpm)* flow
304	3CU4530200	200 l/min *(52.8 US gpm)* flow
Double acting with A and B closed in neutral position, 4 positions, floating in 4th pos., spool in: F or FV type working section and 13 type positioner or control are required		
501	3CU4541050	50 l/min *(13.2 US gpm)* flow
502	3CU4541100	100 l/min *(26.4 US gpm)* flow
503	3CU4541150	150 l/min *(39.5 US gpm)* flow
504	3CU4541200	200 l/min *(52.8 US gpm)* flow

3A "A" side spool control kit page 68

TYPE	CODE	DESCRIPTION
Mechanical positioners		
7FT	5V07200000	With friction and center position feeling
8	5V08200000	3 positions, spring return to neutral position
13	5V13200000	For floating circuit (**type 5 spool**), 4 pos., detent in 4th position, with spring return to neutral pos.
Proportional hydraulic controls		
8IM	5V08200801*	Range from 5.2 to 15.3 bar *(75 to 222 psi)*
13IM	5V13200800*	For floating circuit (**type 5 spool**), range 2.5 to 7 bar *(75 to 222 psi)*, floating 11 bar *(160 psi)*

3B Electrohydraulic controls page 70

TYPE	CODE	DESCRIPTION
Standard types		
8EZ3T-12VDC	5V08200721	With AMP integrated connector
8EZ3T-24VDC	5V08200741	With AMP integrated connector
8EZ3T4-12VDC	5V08200722	With Deutsch integrated conn.
8EZ3T4-24VDC	5V08200742	With Deutsch integrated conn.
With digital spool position sensor#		
8EZ3TSPSD-12VDC	5V08200725	With AMP integrated connector
8EZ3TSPSD-24VDC	5V08200745	With AMP integrated connector
8EZ3T4SPSD-12VDC	5V08200727	With Deutsch integrated conn.
8EZ3T4SPSD-24VDC	5V08200747	With Deutsch integrated conn.
With analog spool position sensor#		
8EZ3TSPSL-12VDC	5V08200625	With AMP integrated connector
8EZ3TSPSL-24VDC	5V08200645	With AMP integrated connector
8EZ3T4SPSL-12VDC	5V08200627	With Deutsch integrated conn.
8EZ3T4SPSL-24VDC	5V08200647	With Deutsch integrated conn.
For floating circuit (**type 5 spool**)		
13EZ3T-12VDC	5V13200721	With AMP integrated connector
13EZ3T-24VDC	5V13200741	With AMP integrated connector
13EZ3T4-12VDC	5V13200722	With Deutsch integrated conn.
13EZ3T4-24VDC	5V13200742	With Deutsch integrated conn.

4 "B" side spool control kit page 74

TYPE	CODE	DESCRIPTION
LG	5LEV200802	Cast iron lever box
LGN	5LEV200801	Cast iron lever box, without lever
L	5LEV200701	Aluminium lever box

5 Port valves page 75

TYPE	CODE	DESCRIPTION
"U" size valves		
UT	XTAP522442	Valve blanking plug
C	5KIT410000	Anticavitation valve (for U cavity)

Fixed setting antishock and anticavitation valves: setting is referred to 10 l/min *(2.6 US gpm)*

TYPE: **U 100** CODE: 5KIT330 100
└setting (bar) └setting (bar)

SETTING:

50 bar *(725 psi)*	63 bar *(914 psi)*	80 bar *(1150 psi)*
100 bar *(1450 psi)*	110 bar *(1590 psi)*	125 bar *(1800 psi)*
140 bar *(2050 psi)*	150 bar *(2150 psi)*	160 bar *(2300 psi)*
175 bar *(2550 psi)*	190 bar *(2750 psi)*	200 bar *(2900 psi)*
210 bar *(3050 psi)*	230 bar *(3350 psi)*	240 bar *(3500 psi)*
250 bar *(3600 psi)*	260 bar *(3750 psi)*	270 bar *(3900 psi)*
280 bar *(4050 psi)*	290 bar *(4200 psi)*	300 bar *(4350 psi)*
310 bar *(4500 psi)*	320 bar *(4650 psi)*	340 bar *(4950 psi)*
360 bar *(5200 psi)*	400 bar *(5800 psi)*	420 bar *(6100 psi)*

"UL" size valves		
ULT	XTAP528520	Valve blanking plug
CL	5KIT409000	Anticavitation valve (for UL cavity)

Fixed setting antishock and anticavitation valves with pressure relief function: setting is referred to 5 l/min *(1.3 US gpm)*

TYPE: **UL 100** CODE: 5KIT340 100 L
└setting (bar) └setting (bar)

SETTING:

50 bar *(725 psi)*	70 bar *(1010 psi)*	80 bar *(1150 psi)*
100 bar *(1450 psi)*	120 bar *(1750 psi)*	130 bar *(1900 psi)*
140 bar *(2050 psi)*	150 bar *(2150 psi)*	160 bar *(2300 psi)*
170 bar *(2450 psi)*	180 bar *(2600 psi)*	190 bar *(2750 psi)*
200 bar *(2900 psi)*	210 bar *(3050 psi)*	220 bar *(3200 psi)*
250 bar *(3600 psi)*	270 bar *(3900 psi)*	300 bar *(4350 psi)*
320 bar *(4650 psi)*	350 bar *(5050 psi)*	370 bar *(5350 psi)*
380 bar *(5500 psi)*		

6 L.S. port relief valves page 76

Standard setting is referred to 10 l/min *(2.6 US gpm)* flow.

TYPE	ID	CODE	DESCRIPTION
LSD	**S**	XCAR126215	With blind nut, range 40-180 bar *(580-2600 psi)*, standard setting 90 bar *(1300 psi)*
		XCAR126213	Range 180-350 bar *(2600-5100 psi)*, standard setting 180 bar *(2600 psi)*
LSH	**H**	XCAR126216	With locked arrangement, range 40-180 bar *(580-2600 psi)*, std setting 90 bar *(1300 psi)*
		XCAR126217	Range 180-350 bar *(2600-5100 psi)*, standard setting 180 bar *(2600 psi)*
LSZ	**Z**	5CAR126221	With anti-tamper cap, range 40-180 bar *(580-2600 psi)*, std setting 90 bar *(1300 psi)*
		5CAR126219	Range 180-350 bar *(2600-5100 psi)*, standard setting 180 bar *(2600 psi)*
ST	**ST**	5KIT126210	Relief valve blanking plug

7 Section threading

Specify threading only if it is different from BSP standard. For section with ISO 6162-1 type 1 flange connection digit: **FS3-M(BSP),** only **FS3-M** for **C10** type.

8 Plug for single acting spool*

CODE	DESCRIPTION
3XTAP740210	G1 plug
4FL1066180	DN19 blind flange

Working section

Dimensions and hydraulic circuit

Without port valves

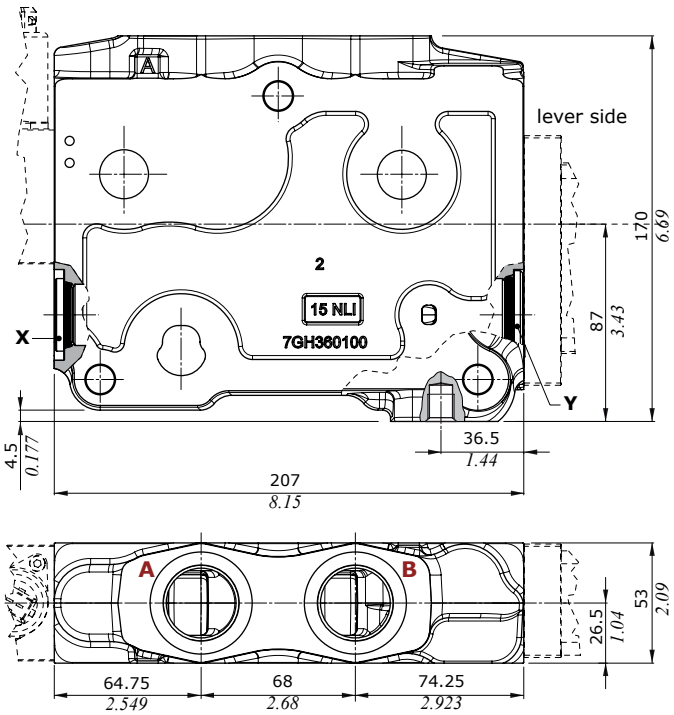

LS bottom port position
(not for C10 type)

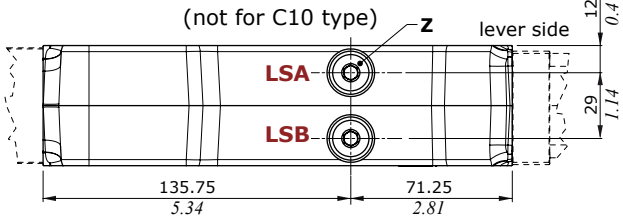

Wrenches and tightening torques

X = allen wrench 12 - 90 Nm *(66 lbf)*
Y = allen wrench 17 - 90 Nm *(66 lbf)*
Z = allen wrench 6 - 24 Nm *(17.7 lbf)*

FS3-M(BSP) optional connection

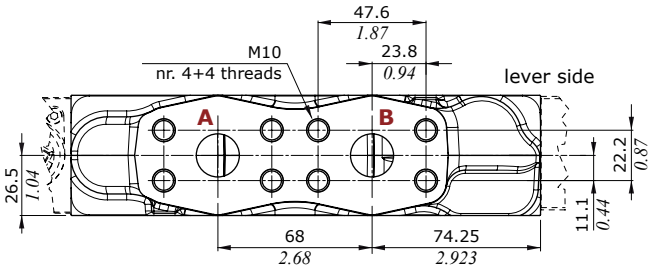

With port valves
"U" and "UL" size valves have
the same position

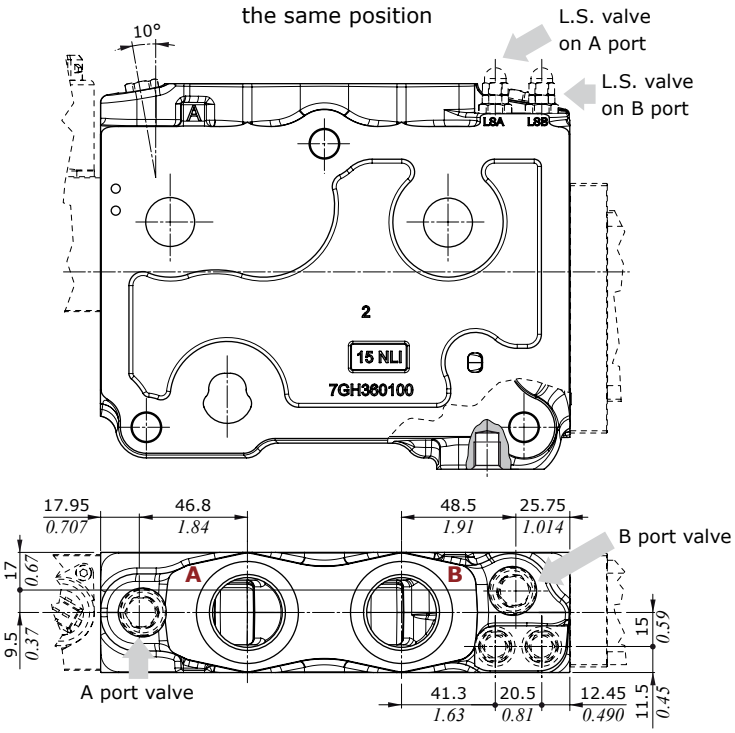

Dimensions and hydraulic circuit

With compensator

C10 type

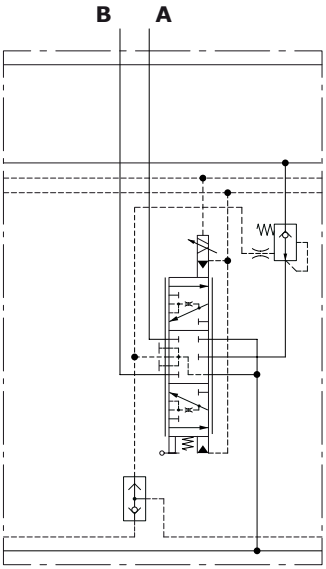

C11 type

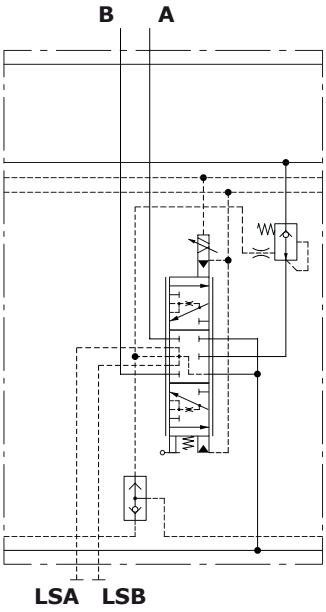

C22 - C32 types

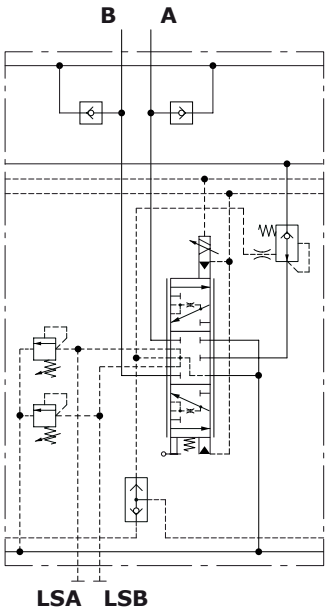

F32 type

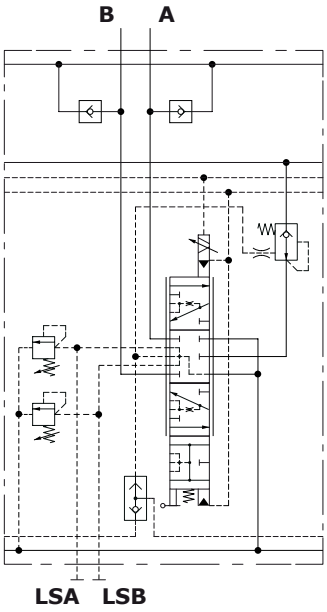

Without compensator, with check valve

CV11 type

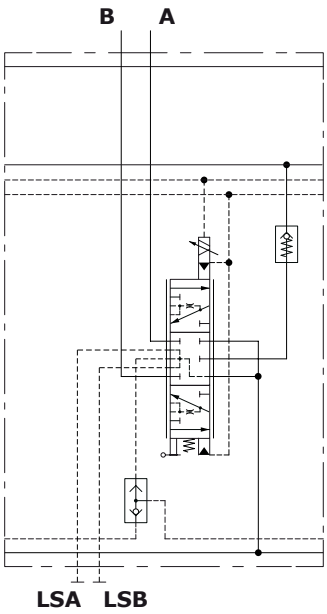

CV22 - CV32 types

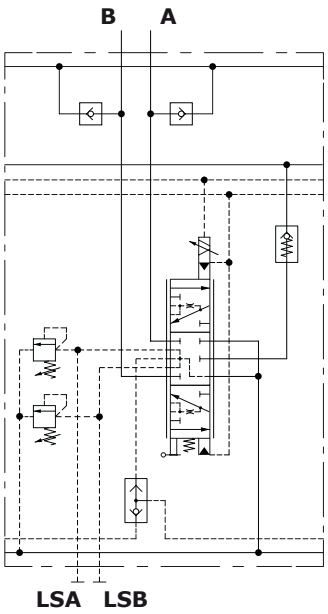

FV32 type

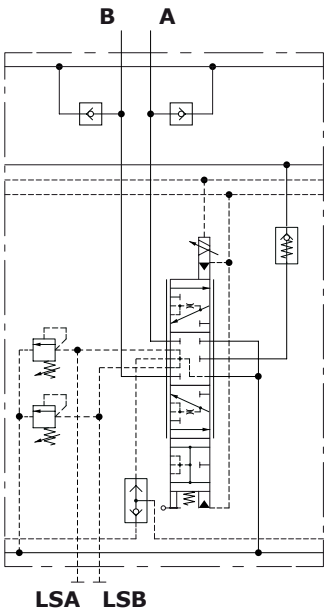

Working section

Spools

1 type spool
A, B closed in neutral position

2 **0** 1

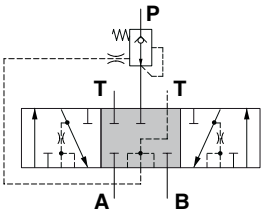

Spool stroke
position 1: - 8 mm *(- 0.31 in)*
position 2: + 8 mm *(+ 0.31 in)*

2 type spool
A, B open to tank in neutral pos.

2 **0** 1

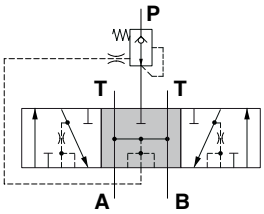

Spool stroke
position 1: - 8 mm *(- 0.31 in)*
position 2: + 8 mm *(+ 0.31 in)*

2H type spool
A, B partially to tank in neutral pos.

2 **0** 1

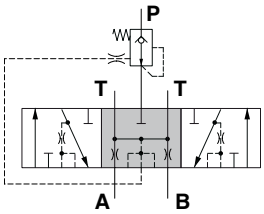

Spool stroke
position 1: - 8 mm *(- 0.31 in)*
position 2: + 8 mm *(+ 0.31 in)*

3 type spool
single acting on A

2 **0** 1

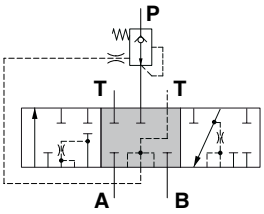

Spool stroke
position 1: - 8 mm *(- 0.31 in)*
position 2: + 8 mm *(+ 0.31 in)*

5 type spool
floating in 4th position (pos.3)

2 **0** 1 3

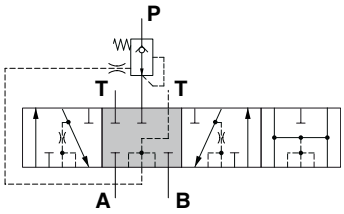

Spool stroke
position 1: - 8 mm *(- 0.31 in)*
position 2: + 8 mm *(+ 0.31 in)*
position 3: - 13 mm *(- 0.51 in)*

Spools

Following curves are detected with standard spools, connecting P⇒A⇒B⇒T and P⇒B⇒A⇒T ports without flow multiplication. Customized spools with backpressure or flow multiplication may require different force, pressure and pilot current for operation.

NOTE: for spools up to 120 l/min (*31.7 US gpm*), the effective flow on working ports may differ by 10% between the 1st an 10th section.

Metering curves
Compensated working section - 3 position spools
Qin = 260 l/min *(68.7 US gpm)*

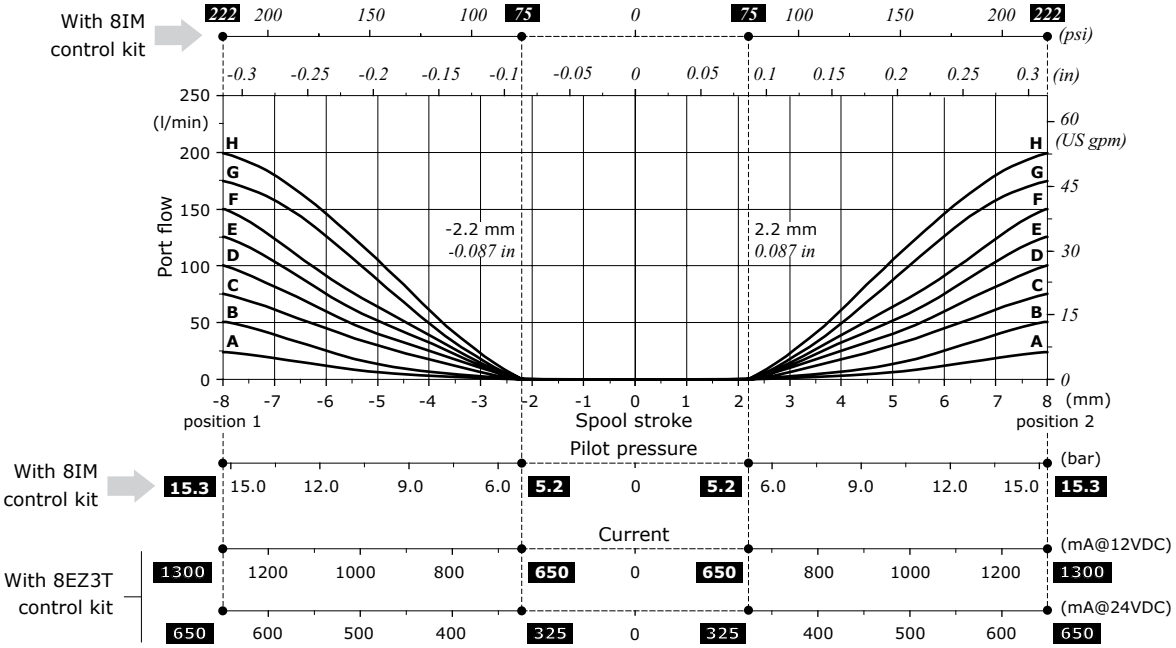

Non-compensated working section
Spool flow vs. Stand-by pressure
(margin pressure)

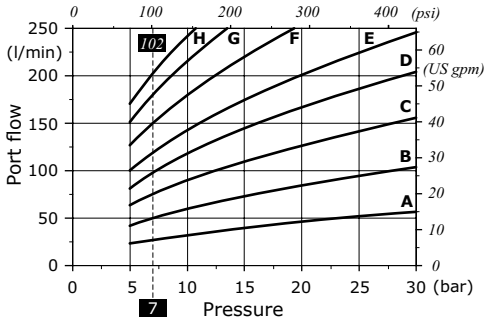

Spool nominal flow @ 7 bar *(102 psi)* stand-by (margin pressure)

A = 25 l/min *(6.6 US gpm)*
B = 50 l/min *(13.2 US gpm)*
C = 75 l/min *(19.8 US gpm)*
D = 100 l/min *(26.4 US gpm)*
E = 125 l/min *(33 US gpm)*
F = 150 l/min *(39.5 US gpm)*
G = 175 l/min *(46.2 US gpm)*
H = 200 l/min *(52.8 US gpm)*

Working section

"A" side spool control kit

With friction and center position feeling: 7FT type

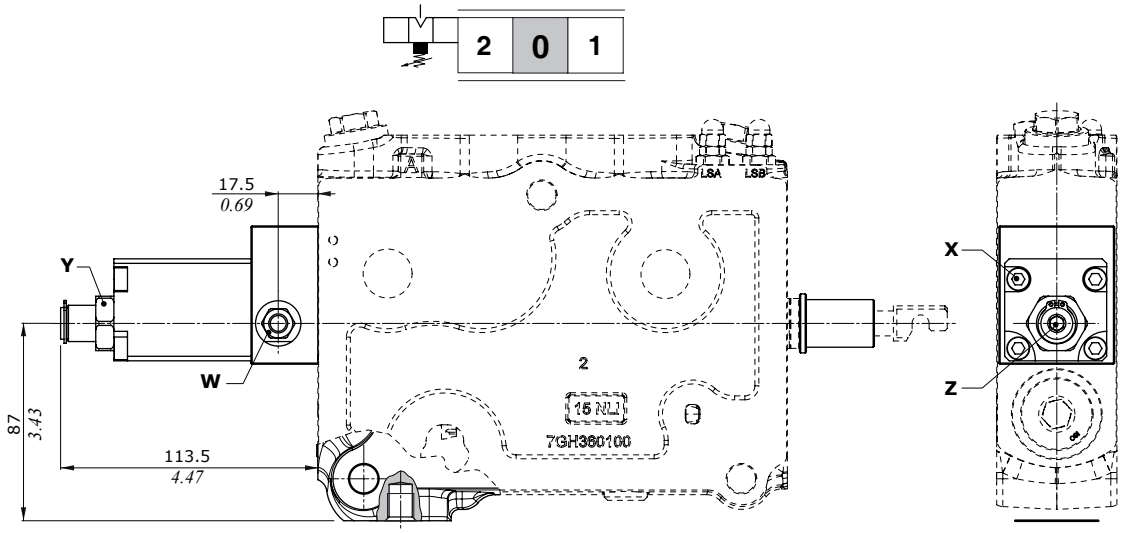

Features

Friction load adjusting . . . . . .: 20-150 N *(4.5-34 lbf)*
Friction load std. setting . . . . .: 100 N *(22.5 lbf)*
Center tap (more than load). . .: 100 N *(22.5 lbf)*

Wrenches and tightening torques

X = allen wrench 5 - 9.8 Nm *(7.2 lbf)*
Y = wrench 24 - 42 Nm *(31 lbf)*
Z = allen wrench 6
W = wrench 13 - 24 Nm *(17.7 lbf)*

With spring return to neutral position: 8 type

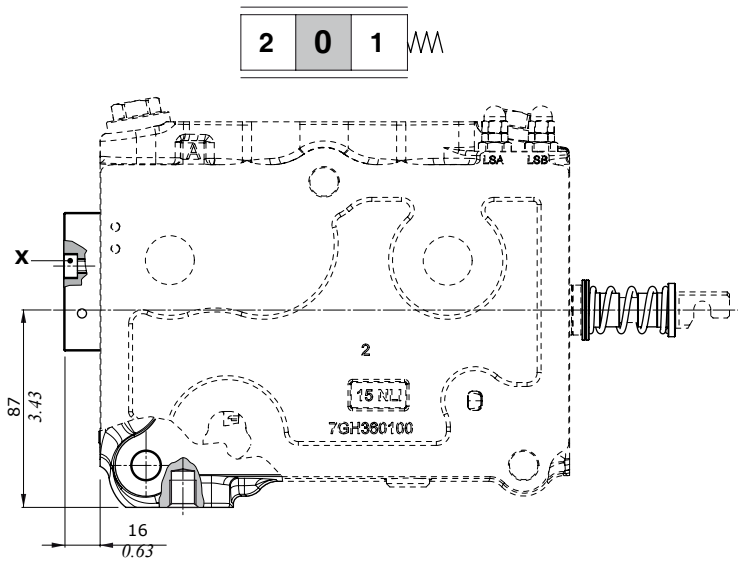

Force vs. Stroke diagram

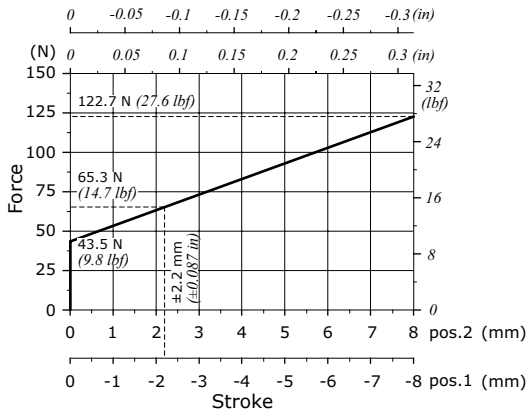

Wrenches and tightening torques

X = allen wrench 5 - 9.8 Nm *(7.2 lbf)*

"A" side spool control kit

With detent in 4th position (pos.3), for floating circuit: 13 type

F or FV type working section and floating circuit type 5 spools are required

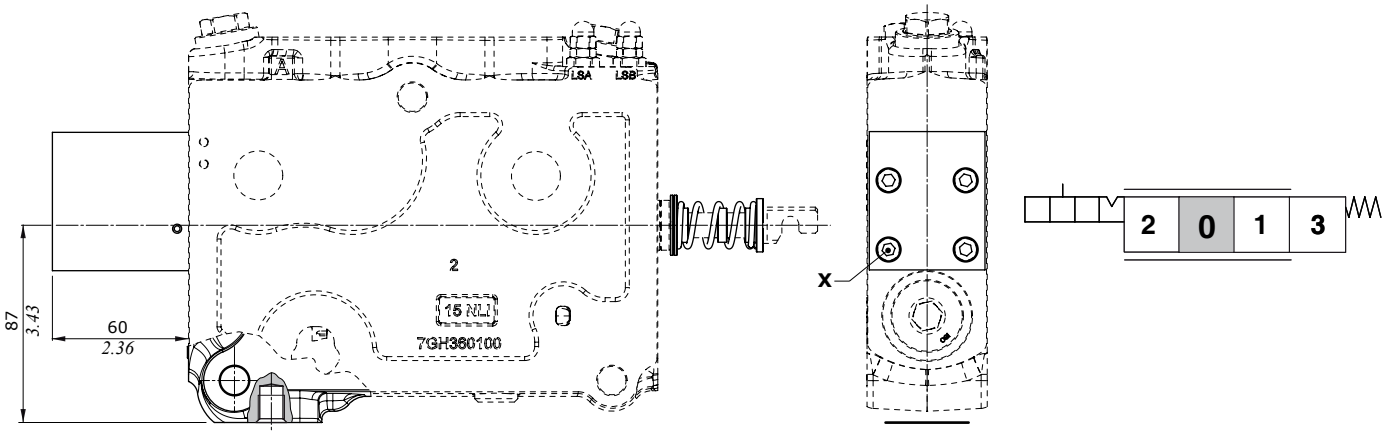

Wrenches and tightening torques

X = allen wrench 5 - 9.8 Nm *(7.2 lbf)*

Proportional hydraulic controls

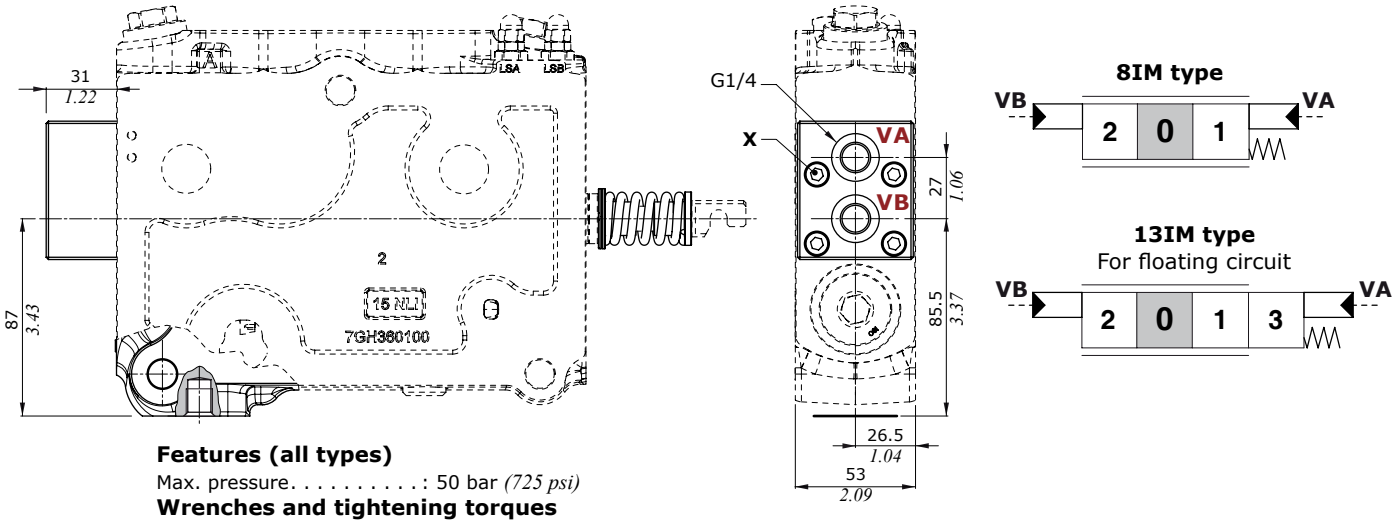

Features (all types)

Max. pressure. . . . . : 50 bar *(725 psi)*

Wrenches and tightening torques

X = allen wrench 5 - 9.8 Nm *(7.2 lbf)*

8IM type: Stroke vs. Pressure diagram

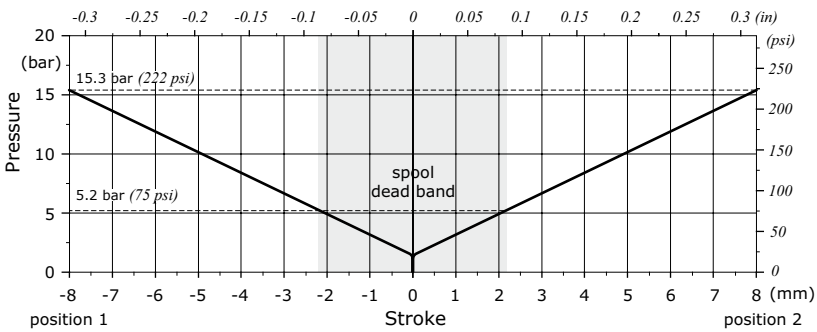

8IM type: suggested pressure control curve: 020 type

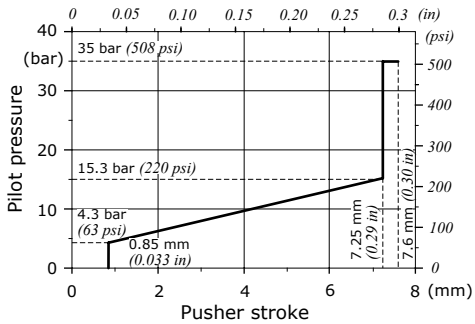

Working section

Electrohydraulic controls

Following specifications are measured with:
- mineral oil of 46 mm²/s (*46 cSt)* viscosity at 40°C (*104°F)* temperature,
- 20°C (*60°F)* environmental temperature,
- standard spools, connecting P⇒A⇒B⇒T ports without flow multiplication,
- 12 VDC and 24 VDC nominal voltage with ± 10% tolerance.

Specifications		Spool control type	
		8EZ3T	**13EZ3T**
Electric specifications			
Coil impedance	12 VDC	4.72 Ω	4.72 Ω
	24 VDC	20.8 Ω	20.8 Ω
Max. operating current	12 VDC	1.5 A	1.5 A
	24 VDC	0.75 A	0.75 A
No load current consumption		0	0
Hysteresis max. (1)	internal drain	5% with lever	7% with lever
Time response	from 0 ⇒ 100% of stroke	< 150 ms	< 250 ms
	from 100% ⇒ 0 of stroke	< 80 ms	< 125 ms
Min. flow control signal	12 VDC	650 mA	400 mA
	24 VDC	325 mA	200 mA
Max. flow control signal	12 VDC	1300 mA	600 mA
	24 VDC	650 mA	300 mA
Float flow control signal	12 VDC	-	850 mA
	24 VDC	-	250 mA
Dither frequency	low frequency	150 Hz	150 Hz
	high frequency	150 Hz - 350 mA	150 Hz - 350 mA
Insertion		100%	100%
Coil insulance		Class H (180°C - *356°F*)	Class H (180°C - *356°F*)
Connector type		AMP JPT - Deutsch DT	AMP JPT - Deutsch DT
Weather protection (connector)		IP65 (JPT type) - IP69K (DT type)	IP65 (JPT type) - IP69K (DT type)
Hydraulic specifications			
Max. pressure		50 bar (*725 psi*)	50 bar (*725 psi*)
Max. back pressure on drain		2.5 bar *(36 psi)*	2.5 bar *(36 psi)*

Note (1) for the calculation rules please see "Appendix A" on page 80.

Listed electrohydraulic controls require CED400W electronic unit; for information please contact Sales Department.

Electrohydraulic controls: spool position sensor

The sensor can be ordered exclusively through the electrohydraulic controls; please see page 63 for available control list.

SPSL sensor

The SPSL position sensor converts the spool movements into a voltage linear signal.

Working conditions		
Voltage supply		5 VDC
Current absorption		< 10 mA (no load)
Mechanical life		3x10⁶
Connector type		DT04-4P Deutsch
Weather protection		IP67 / IP69K
Working temperature		from -40°C to 105°C *(from -40°F to 221°F)*
Working pressure		350 bar *(5100 psi)*
Max. electrical stroke		±10 mm *(±0.39 in)*
Max. mechanical stroke		±10 mm *(±0.39 in)*
Output signal	range	from 0.5 to 4.5 V
	linearity	± 5%
	spool in neutral	2.5 ± 0.2 V
	max. current	1 mA
EMC compatibility		ISO 13766 / ISO 14982
Mechanical vibrations, shock, bumps		IEC 68-2-6,-27,-29

SPSL sensor output signal

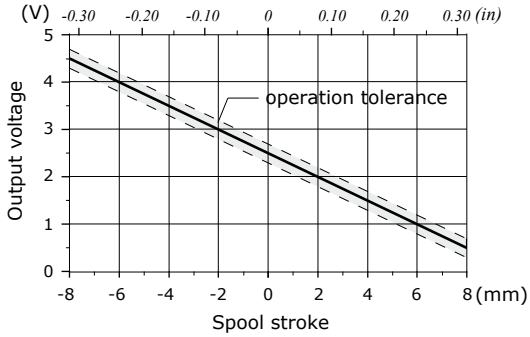

Deutsch DT04-4P connector	
Pin	**Function**
1	+ 5V
2	not connected
3	GND
4	signal OUT

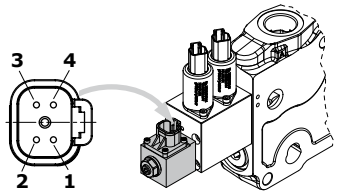

Deutsch DT06-4S mating connector, code 5CON140072

SPSD sensor

The SPSD position sensor converts the spool movements into an electric digital signal.

Working conditions		
Voltage supply		from 9 to 32 VDC
Current absorption		< 10 mA (no load)
Mechanical life		3x10⁶
Connector type		DT04-4P Deutsch
Weather protection		IP67 / IP69K
Working temperature		from -40°C to 105°C *(from -40°F to 221°F)*
Working pressure		350 bar *(5100 psi)*
Max. electrical stroke		±10 mm *(±0.39 in)*
Max. mechanical stroke		±10 mm *(±0.39 in)*
Output signal	type	PNP
	max. current	6 mA
EMC compatibility		ISO 13766 / ISO 14982
Mechanical vibrations, shock, bumps		IEC 68-2-6,-27,-29

SPSD sensor output signal

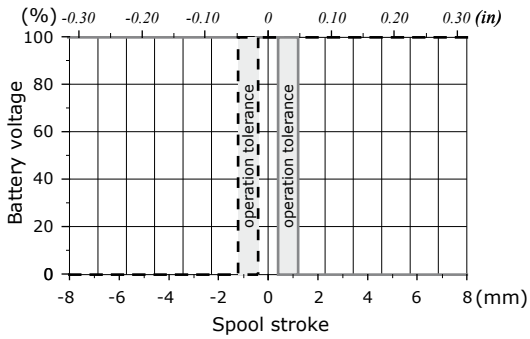

Deutsch DT04-4P connector	
Pin	**Function**
1	Out A
2	GND
3	VB +
4	Out B

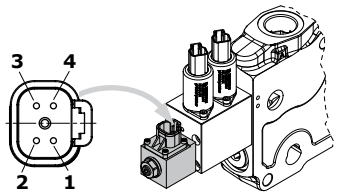

Deutsch DT06-4S mating connector, code 5CON140072

Working section

Electrohydraulic controls

Proportional controls; 8EZ3T - 13EZ3T types

Control Types

❶ : With AMP JPT connector - AMP JPT mating connector, code: 5CON003

❷ : With Deutsch DT04 connector - Deutsch DT06-2S mating connector code: 5CON140031

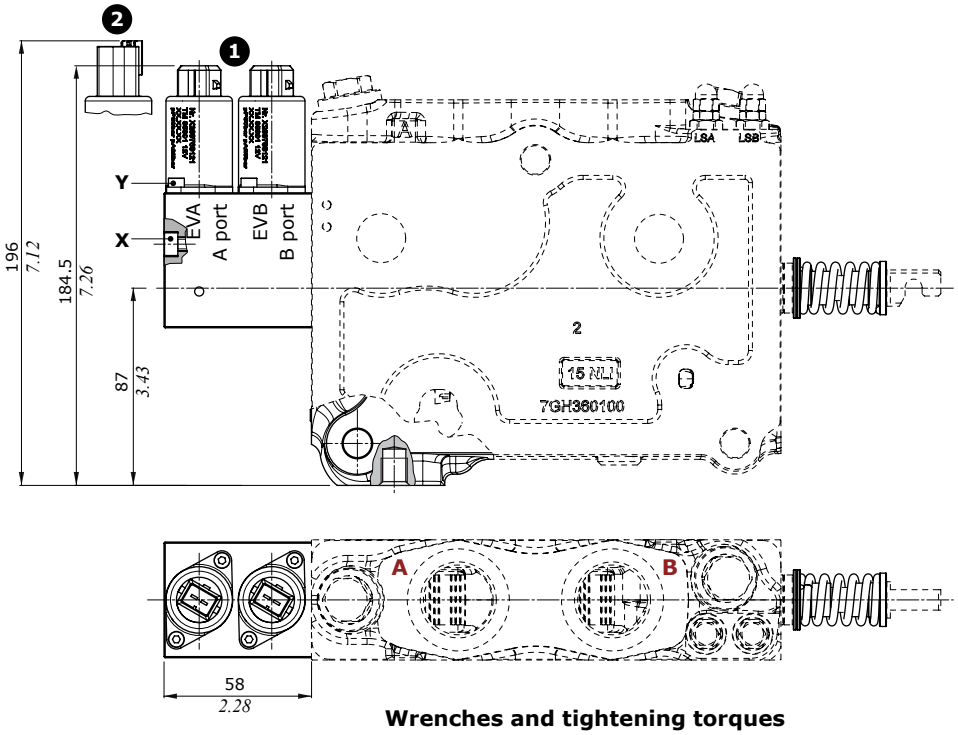

8EZ3T - 8EZ3T4 types

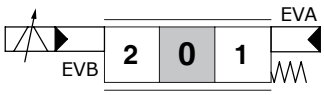

13EZ3T - 13EZ3T4 types
For floating circuit

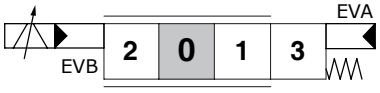

Wrenches and tightening torques

X = allen wrench 5 - 9.8 Nm *(7.2 lbf)*

Y = allen wrench 3 - 5 Nm *(3.7 lbf)*

8EZ3T type: Stroke vs. Current diagram

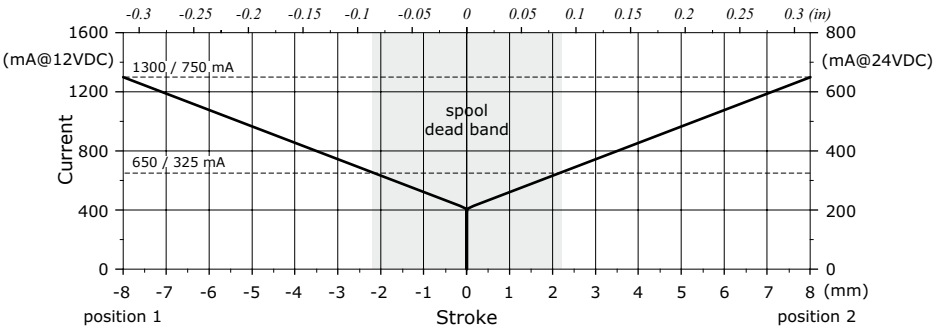

Electrohydraulic controls

Proportional control; 8EZ3TSPSD - 8EZ3TSPSL types

For control features see previous page, for sensor specification and features please see page 71.

Control Types

❶ : With AMP JPT connector - AMP JPT mating connector, code: 5CON003

❷ : With Deutsch DT04 connector - Deutsch DT06-2S mating connector code: 5CON140031

8EZ3TSPSD - 8EZ3T4SPSD types
CANbus interface

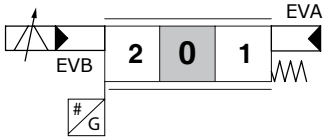

8EZ3TSPSL - 8EZ3T4SPSL types
Analog input

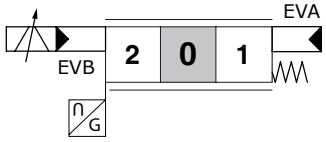

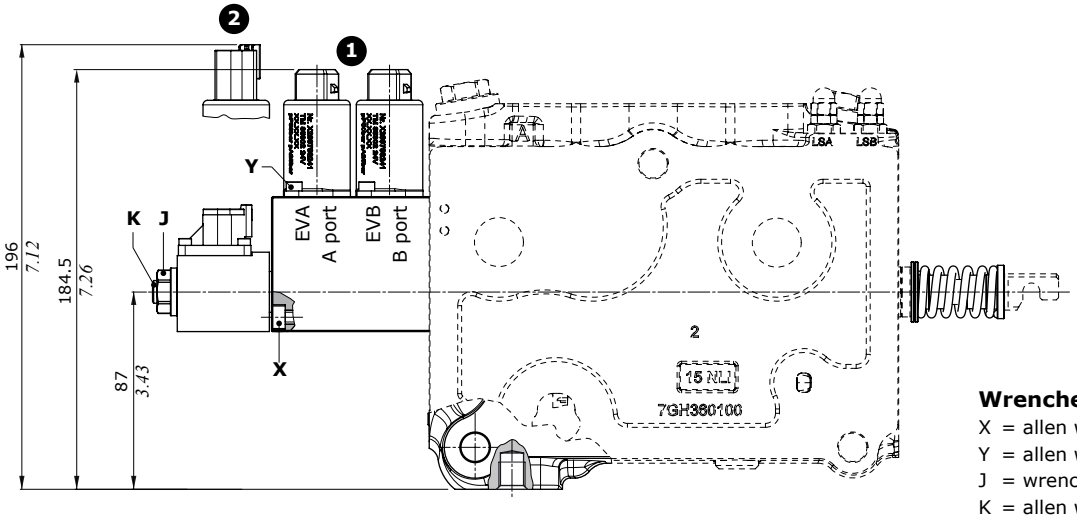

Wrenches and tightening torques

X = allen wrench 5 - 9.8 Nm *(7.2 lbf)*
Y = allen wrench 3 - 5 Nm *(3.7 lbf)*
J = wrench 17 - 9.8 Nm *(7.2 lbf)*
K = allen wrench 4 - 9.8 Nm *(7.2 lbf)*

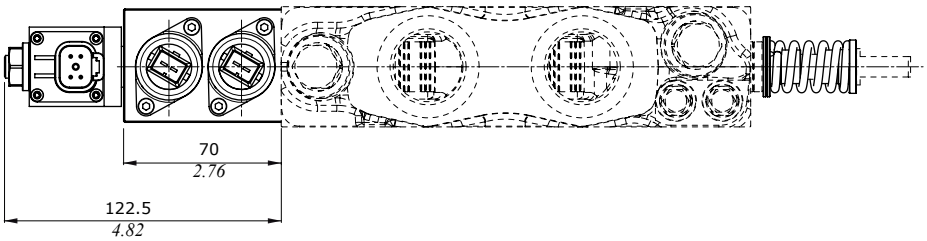

Working section

"B" side spool control kit

Cast iron standard lever box; LG type

2	0	1	3

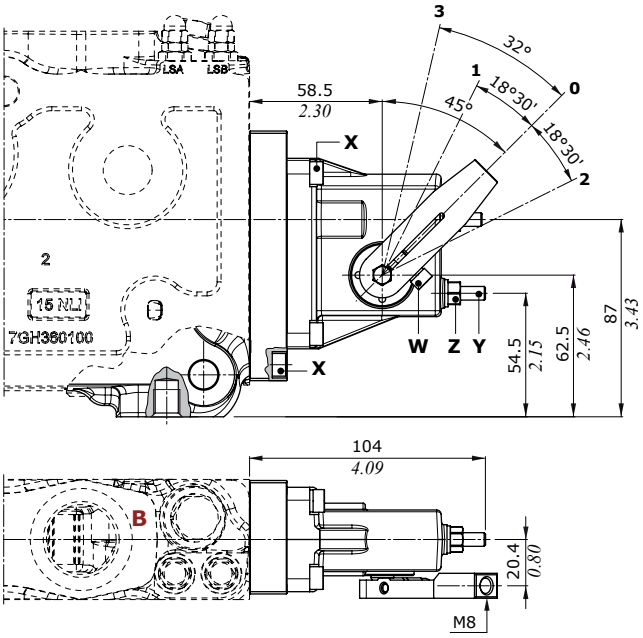

Lever assembly position

Please see page 62 for specification in working section description

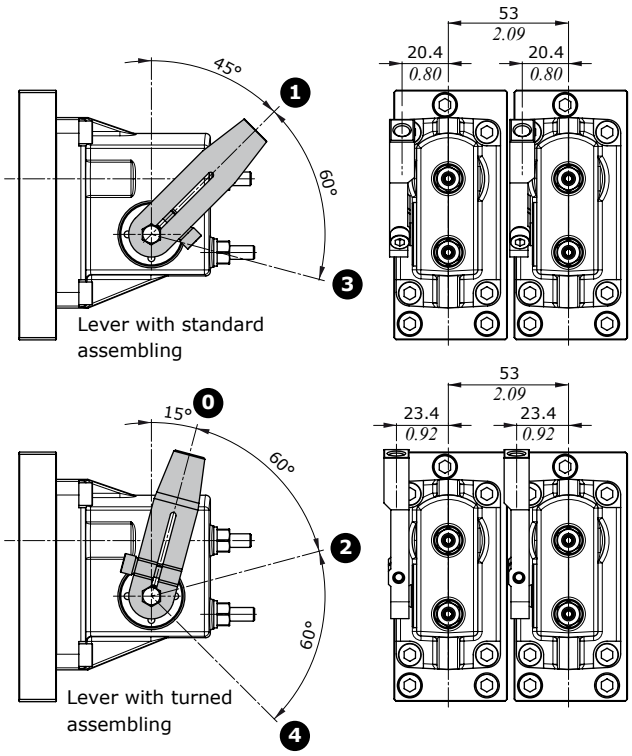

Wrenches and tightening torque

X = allen wrench 5 - 9.8 Nm *(7.2 lbf)*
Y = allen wrench 3
Z = wrench 10 - 9.8 Nm *(7.2 lbf)*
W = allen wrench 4 - 6.6 Nm *(4.9 lbf)*
R = wrench 8

Cast iron lever box, without lever; LGN type

2	0	1	3

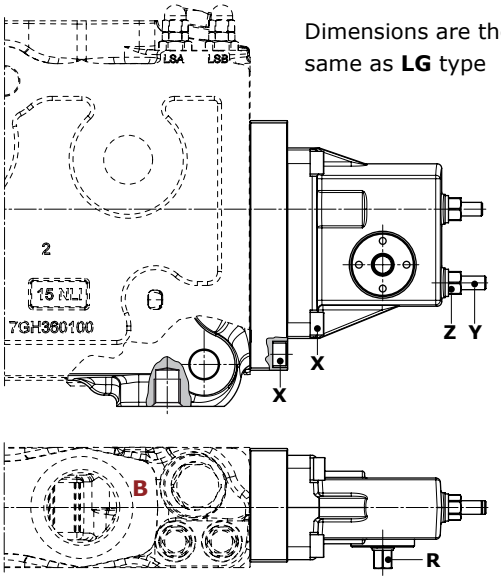

Dimensions are the same as **LG** type

Aluminium lever box; L type

2	0	1	3

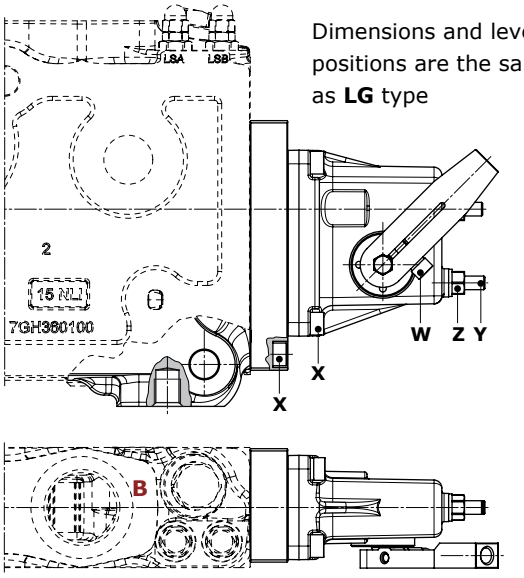

Dimensions and lever positions are the same as **LG** type

Port valves

Antishock anticavitation valves, U type
Anticavitation valve, C type

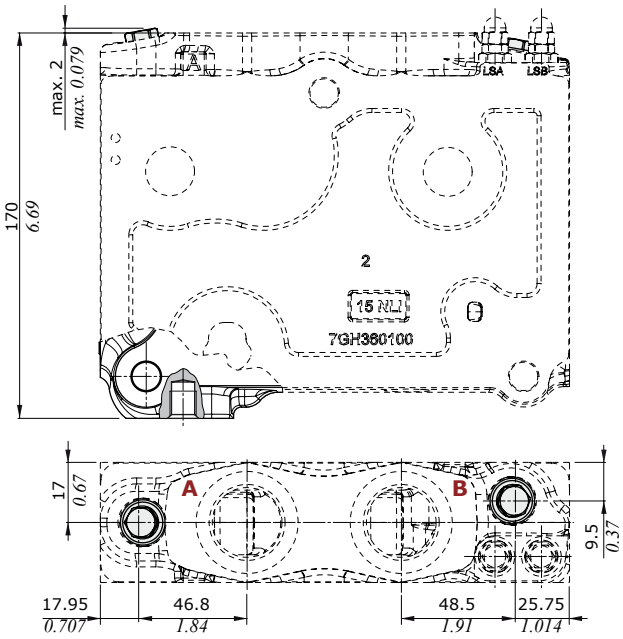

U type
antishock valve

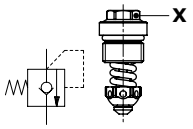

C type
anticavitation valve

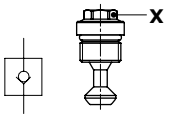

UT type
valve blanking plug

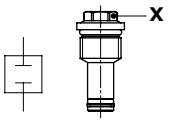

U type, setting example
(10 l/min - *2.6 Us gpm*)

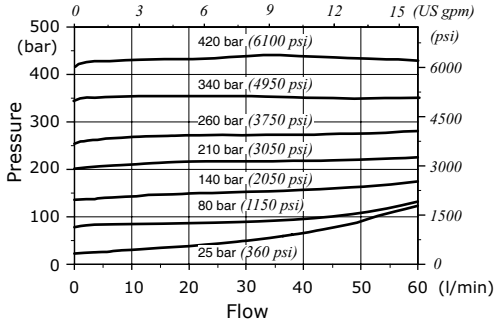

Types U-C, pressure drop
(in anticavitation)

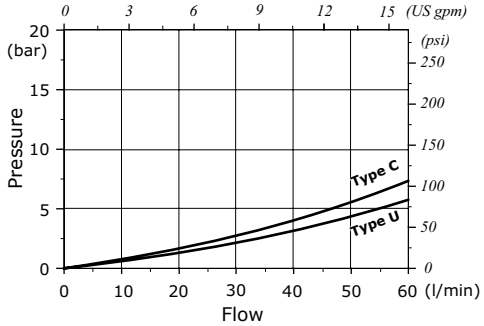

Wrenches and tightening torque
X = wrench 13 - 24 Nm *(17.7 lbf)*
Y = wrench 19 - 42 Nm *(31 lbf)*

Antishock anticavitation valves with pressure relief function, UL type
Anticavitation valve, CL type

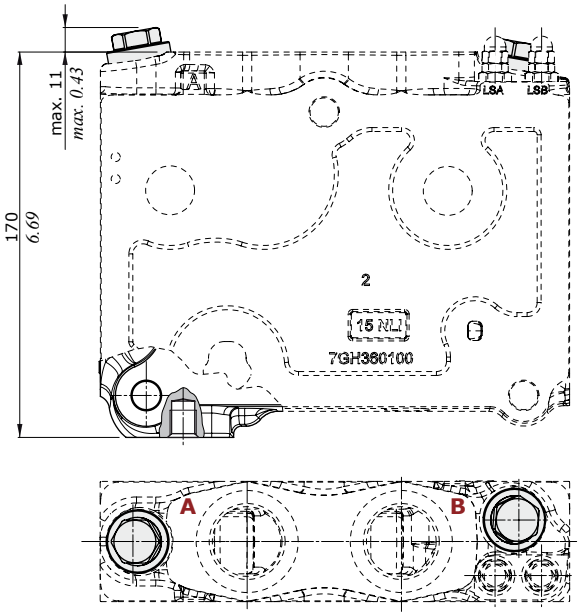

valve position is the same as U type

UL type
antishock valve

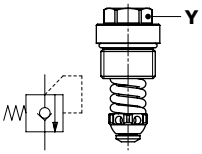

CL type
anticavitation valve

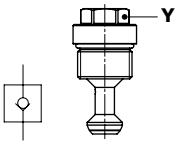

ULT type
valve blanking plug

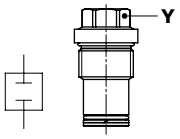

UL type, setting example
(5 l/min - *1.3 Us gpm*)

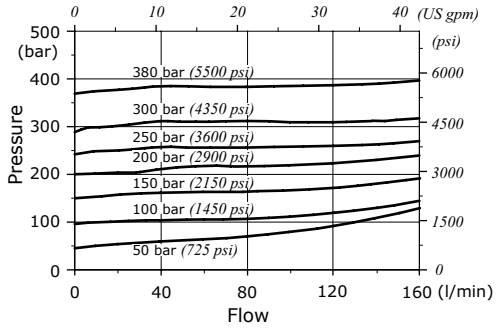

UL-CL types, pressure drop
(in anticavitation)

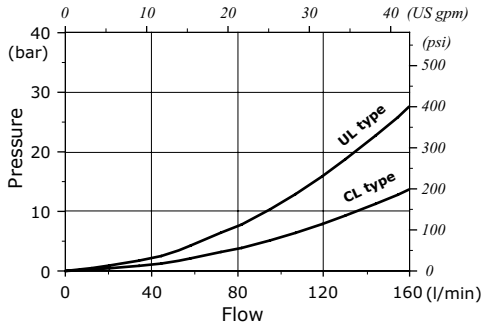

Working section

L.S. port relief valves

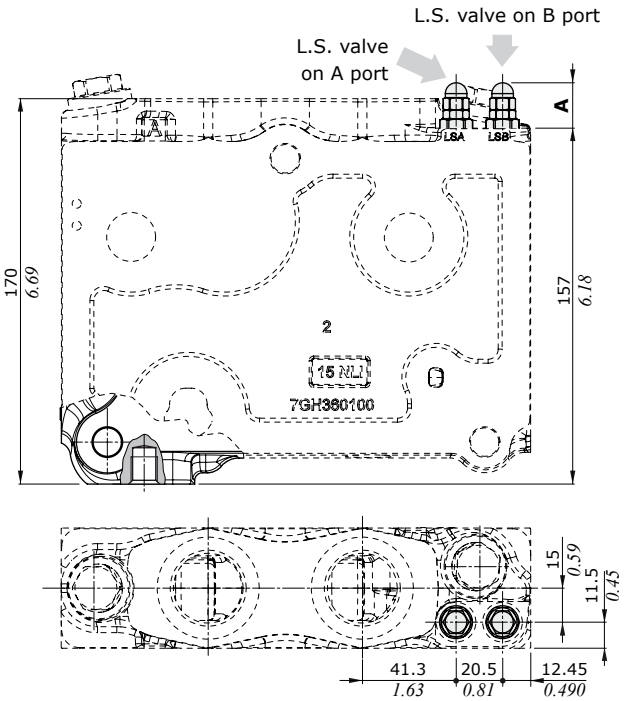

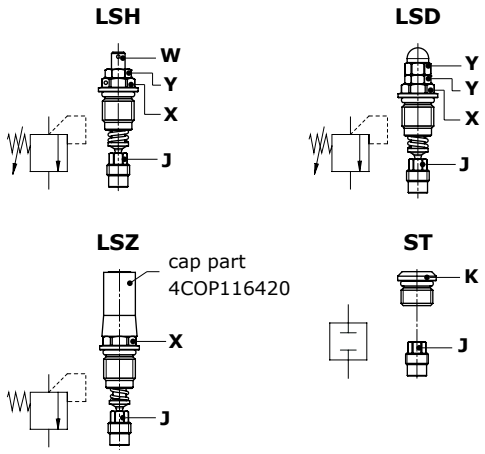

Legenda

LSH: with lock arrangement
LSD: with blind nut
LSZ: with anti-tamper cap
ST: valve blanking plug

Wrenches and tightening torques

X = wrench 13 - 24 Nm *(17.7 lbf)*
Y = wrench 10 - 9.8 Nm *(7.2 lbf)*
W = allen wrench 3
J = wrench 7 - 24 Nm *(17.7 lbf)*
K = allen wrench 5 - 24 Nm *(17.7 lbf)*

Valve type	dim. A	
	mm	*in*
LSD	20	*0.79*
LSH	15.5	*0.61*
LSZ	32.5	*1.28*

Pressure vs. flow diagram

(1) = valve range 40-180 bar *(580-2600 psi)*
(2) = valve range 180-350 bar *(2600-5000 psi)*

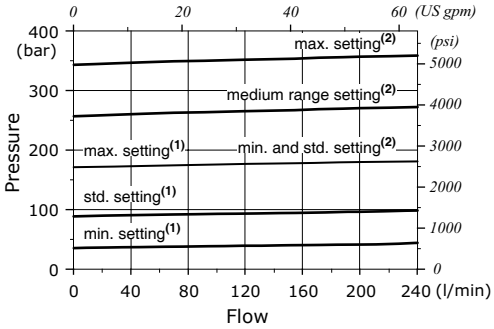

Outlet section part ordering codes

DPC200 / RF 3 0 - .....

1 2 3 4

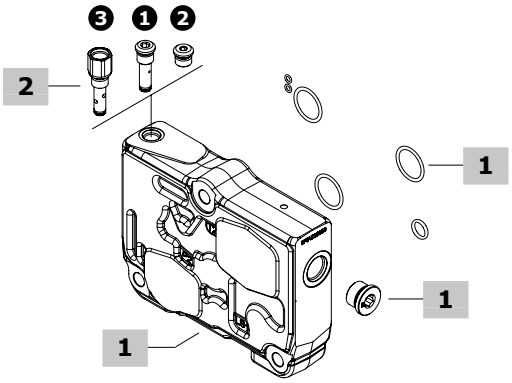

DPC200 / RD 3 1 - .....

1 2 3 4

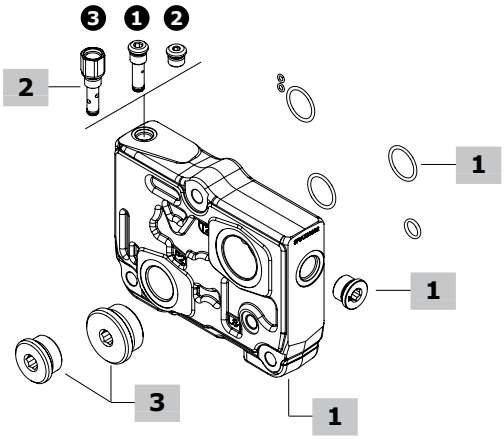

1 Outlet section* page 78

TYPE	CODE	DESCRIPTION
RF	5FIA720300	Without ports
RD	5FIA720302	With P1, T1 and LS1 ports
RD-FS3M(BSP)	5FIA720901	As previous one, with ISO 6162-1 type 1 flange connection

2 Drain options page 79

TYPE	CODE	DESCRIPTION
❶	XTAP517460	Internal drain; to be used with mechanical controls
❷	XTAP217160	Internal drain; to be used with hydraulic controls
❸	XCAR119611*	External drain G1/4; to be used with electrohydraulic controls

3 Port options*

TYPE: **0** DESCRIPTION: Without ports (only for RF type)
TYPE: **1** DESCRIPTION: P1 and T1 ports plugged
PLUG CODE: 3XTAP740210 (G1) + XTAP750240 (G1-1/4)
BLIND FLANGE CODE: 4FL1066180 (DN19) + 4FL1071190 (DN25)
TYPE: **2** DESCRIPTION: P1 port plugged and T1 port open
PLUG CODE: 3XTAP740210 (G1)
BLIND FLANGE CODE: 4FL1066180 (DN19)
TYPE: **3** DESCRIPTION: P1 port open and T1 port plugged
PLUG CODE: XTAP750240 (G1-1/4)
BLIND FLANGE CODE: 4FL1071190 (DN25)
TYPE: **4** DESCRIPTION: P and T ports open

4 Section threading

Specify threading only if it is different from BSP standard.
For section with ISO 6162-1 type 1 flange connection digit: **FS3-M(BSP).**

NOTE (*): *Codes are referred to **BSP** thread*.

Outlet section

Dimensions and hydraulic circuit

RD31 type
With P1, T1 (plugged) and LS1 ports; external drain

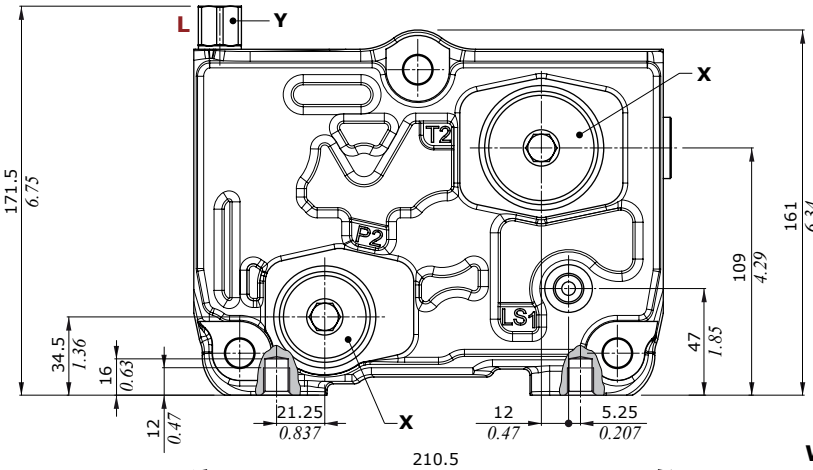

RF30 type
Without ports; external drain

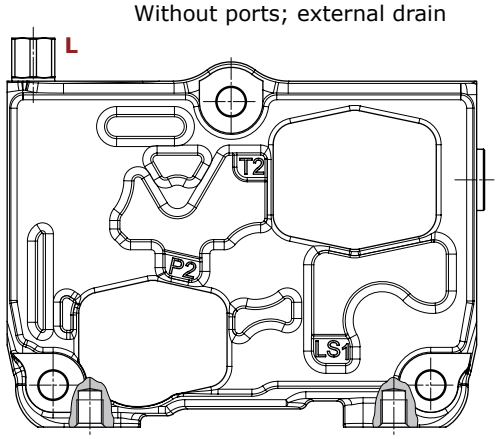

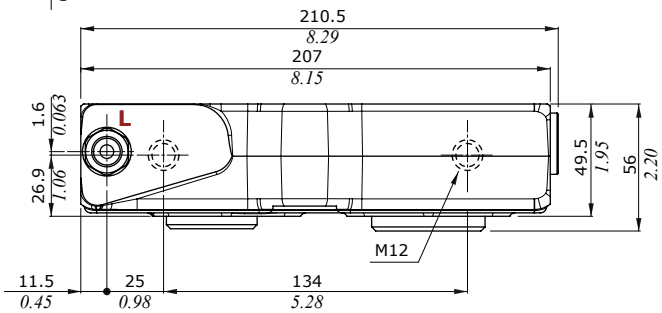

Wrenches and tightening torque
X = allen wrench 12 - 42 Nm *(31 lbf)*
Y = wrench 19 - 24 Nm *(17.7 lbf)*

Note: Do not plug LS1 port (in case it's not used it has to be connected to tank).

FS3-M(BSP) optional connection

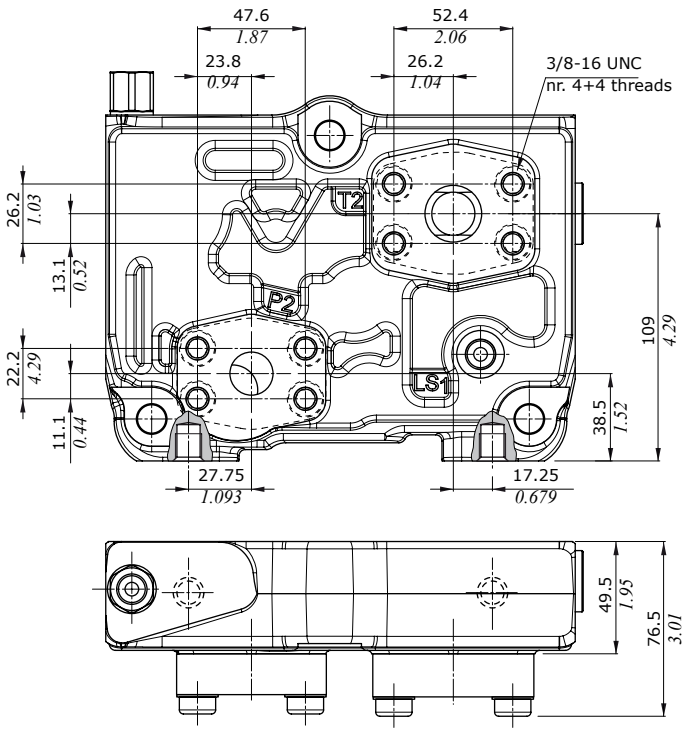

RD31 type

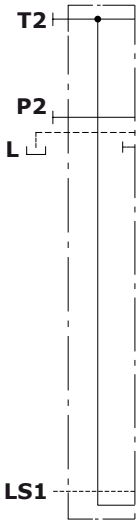

RF30 type

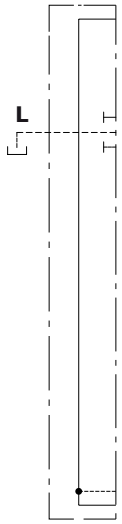

Outlet section

Drain options

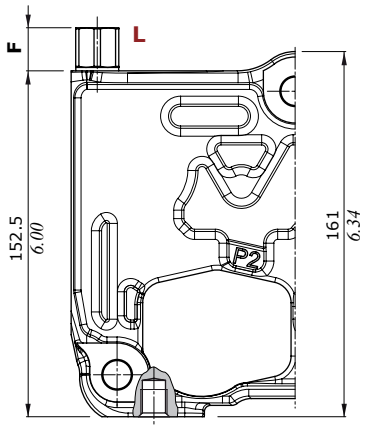

Option	Dim. F	
	mm	*in*
1	3.5	*0.138*
2	3.5	*0.138*
3	19	*0.75*

Option ❶
internal drain for
mechanical controls

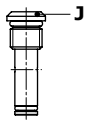

Option ❷
internal drain for
hydraulic controls

Option ❸
external drain for
electrohydraulic controls

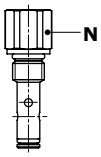

Option 1 **Option 2** **Option 3**

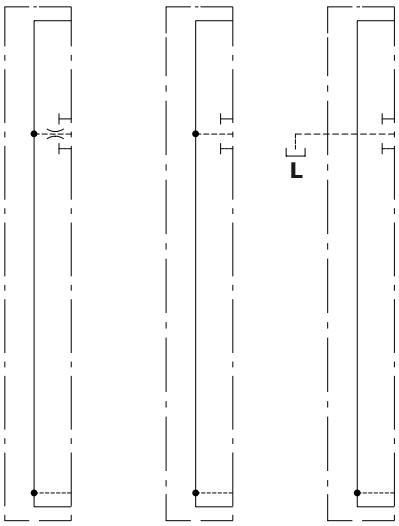

Wrenches and tightening torque

J = allen wrench 5 - 24 Nm (*17.7 lbf*)
M = allen wrench 6 - 24 Nm (*17.7 lbf*)
N = wrench 19 - 24 Nm (*17.7 lbf*)

Connection between DPC Series valves

DPC200 directional valve — DPC130 directional valve

DPC200/1/BR2-10(D220\ELP)/C30-104(200\200)-8EZ3TLG1.UTUT/EIR/C10-1S8EZ3TL1/RF30/DPC130/1-.....

Nr. of working sections — Inlet section — Working section — **1** — Working section — Outlet section — Nr. of working sections

directional valve common specification

....BSP-12VDC-<SB20-CVN>

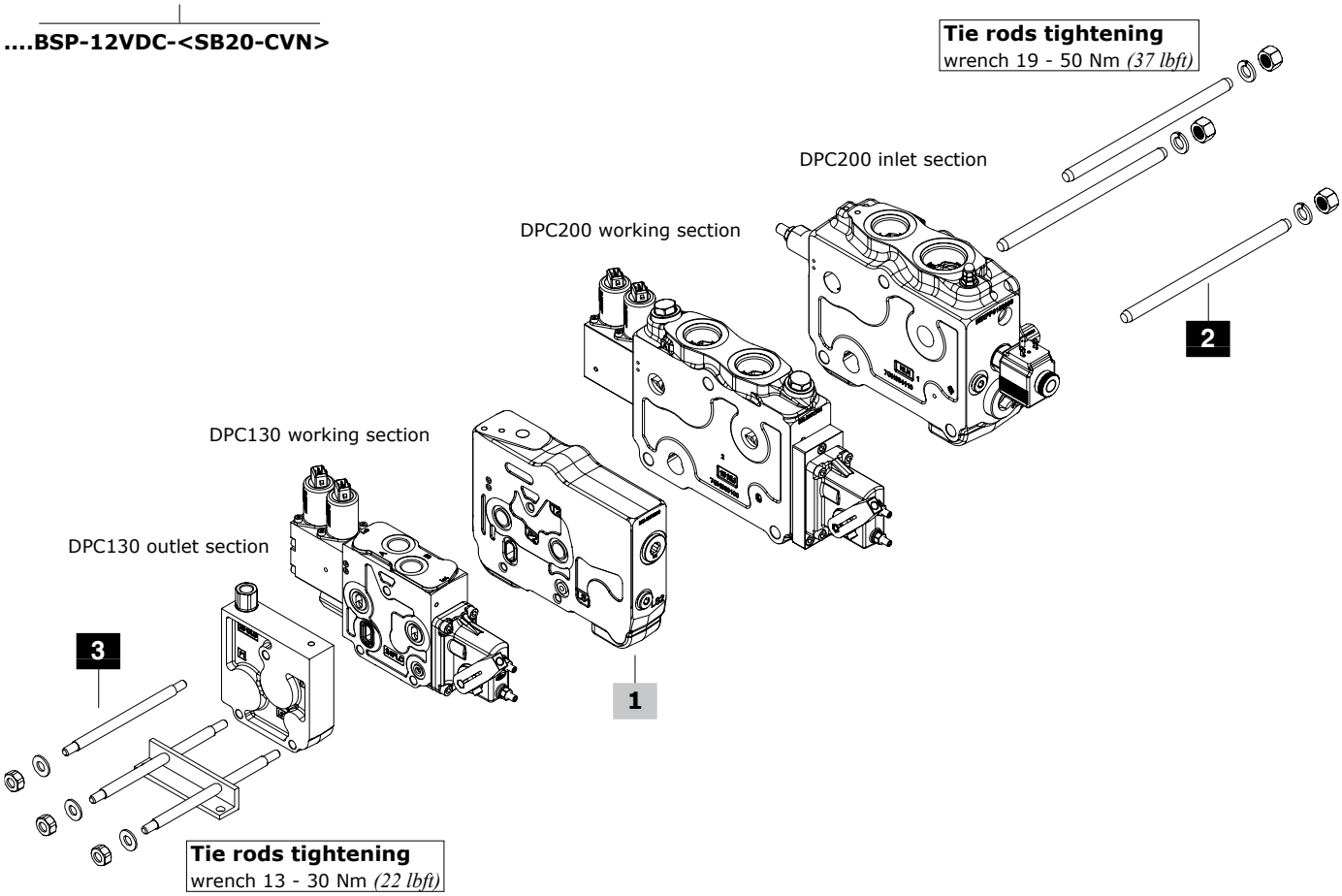

1 Intermediate section page 81

TYPE	CODE	DESCRIPTION
EIR	638403001	Section to assemble DPC200 and DPC130 in single directional valve; with LS port

NOTE: *the maximum number of working sections should not exceed 10 units*

2 DPC200 side assembling kit

CODE	CODE	DESCRIPTION
With inlet section type		
BR type	**BRF type**	
5TIR112180	5TIR112141	For 1 working section valve
5TIR112235	5TIR112194	For 2 working section valve
5TIR112287	5TIR112247	For 3 working section valve
5TIR112340	5TIR112300	For 4 working section valve
5TIR112393	5TIR112354	For 5 working section valve
5TIR112446	5TIR112407	For 6 working section valve
5TIR112499	5TIR112460	For 7 working section valve
5TIR112552	5TIR112512	For 8 working section valve
5TIR112605	5TIR112565	For 9 working section valve

3 DPC130 side assembling kit

CODE	DESCRIPTION
5TIR108112	For 1 working section valve
5TIR108160	For 2 working section valve
5TIR108208	For 3 working section valve
5TIR108256	For 4 working section valve
5TIR108304	For 5 working section valve
5TIR108352	For 6 working section valve
5TIR108400	For 7 working section valve
5TIR108448	For 8 working section valve
5TIR108496	For 9 working section valve

Connection between DPC Series valve

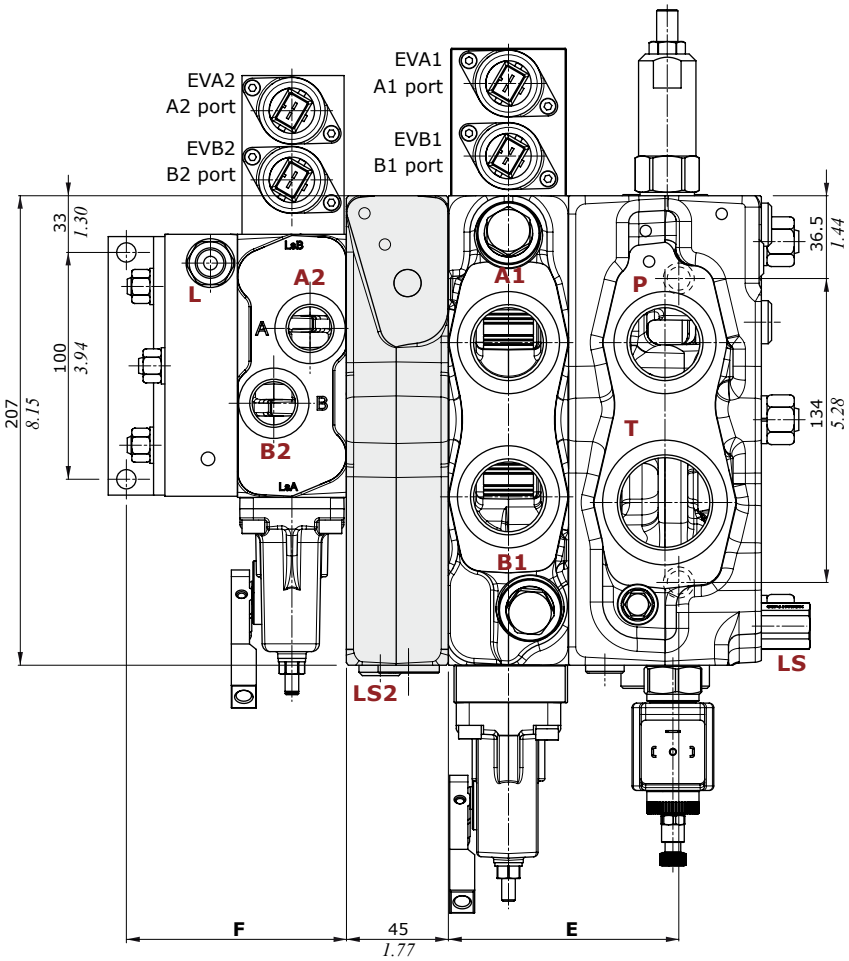

Nr. of working sections	dim. E				dim. F	
	BR inlet section		BRF inlet section			
	mm	*in*	mm	*in*	mm	*in*
1	101.5	*4.00*	73.1	*2.88*	97	*3.82*
2	151.5	*6.08*	126.1	*4.96*	145	*5.71*
3	207.5	*8.17*	179.1	*7.05*	193	*7.60*
4	260.5	*10.26*	232.1	*9.14*	241	*9.49*
5	313.5	*12.34*	285.1	*11.22*	289	*11.38*
6	366.5	*14.43*	338.1	*13.31*	337	*13.27*
7	419.5	*16.52*	391.1	*15.40*	385	*15.16*
8	472.5	*18.60*	444.1	*17.48*	433	*17.05*
9	525.5	*20.69*	497.1	*19.57*	481	*18.94*

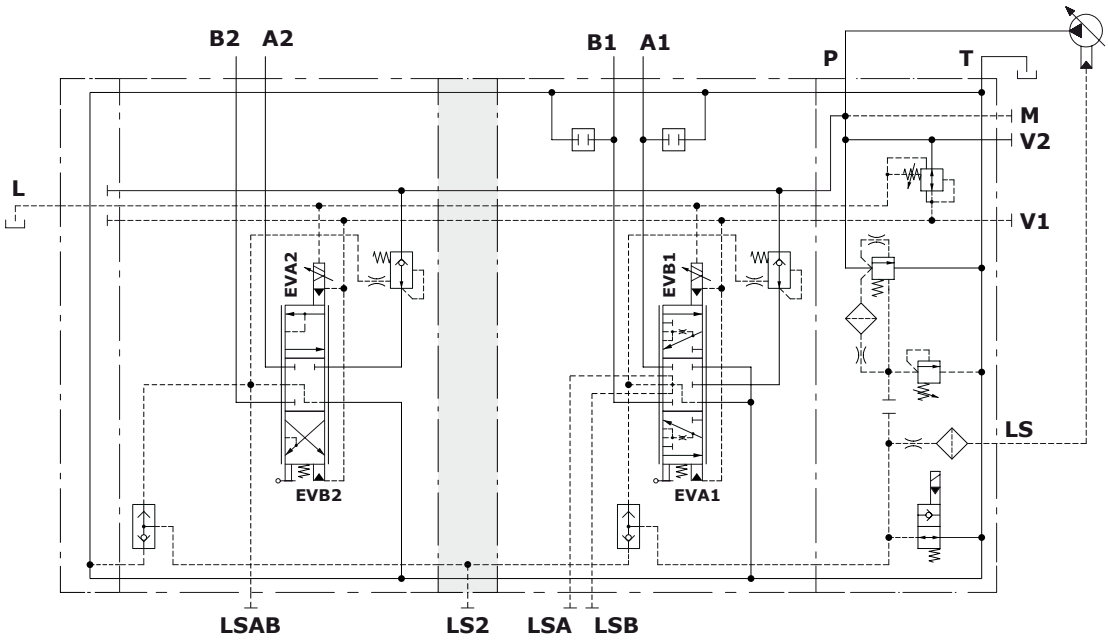

Coils and connectors

Coil type	Voltage	Connectors					
		ISO4400	Deutsch DT	AMP JPT	Packard Weatherpack	Packard Metri-pack	Flying leads (without conn.)
BER	10 VDC	4SLE001000A	-	-	-	-	-
	12 VDC	4SLE001200A 4SLE001217A(3)	4SLE001201A(5) 4SLE001209A(3-4) 4SLE001202A(5) 4SLE001216A(3-5) 4SLE001206A(2)	4SLE001203A(4) 4SLE001211A(3-4)	4SLE001210A(2)	4SLE001214A(2)	4SLE001207A
	14 VDC	-	4SLE001400A(5) 4SLE001401A(3-5) 4SLE001402A(3-4)	4SLE001403A(3-4)	-	-	-
	24 VDC	4SLE002400A 4SLE002408A(3) 4SLE302400A(1)	4SLE002401A(4) 4SLE002407A(3-4) 4SLE002402A(5)	4SLE002403A(4)	-	-	4SLE002404A
	28 VDC	-	4SLE002802A(5)	4SLE002800A(4)	-	-	-
	48 VDC	4SLE004800A 4SLE304800A(1)	-	-	-	-	-
	110VDC	4SLE011000A 4SLE311000A(1)	-	-	-	-	-
	220 VDC	4SLE022000A 4SLE322000A(1)	-	-	-	-	-
BQP19	12 VDC	4SL5000126A	4SL5000125A(6)	4SL5000129A(5)	-	-	-
	24 VDC	4SL5000245A	4SL5000244A(6)	4SL5000248A(5)	-	-	-
BT	10 VDC	4SL3000100					
	12 VDC	4SL3000120 4SL3000126(4)	4SL3000130(6) 4SL3000134(3-6) 4SL3000128(2)	4SL3000122(5) 4SL3001200(3-5)	4SL3000124(2)	4SL3000127(2)	4SL300012C
	24 VDC	4SL3000240 4SL3030240(1)	4SL3000249(6) 4SL300024C(3-6)	4SL3000248(5)	-	-	4SL3000246
	26 VDC	4SL3000260	-	-	-	-	-
	48 VDC	4SL3000480 4SL3030480(1)	-	-	-	-	-
	110 VDC	4SL3001100 4SL3031100(1)	-	-	-	-	-
	220 VDC	4SL3002200 4SL3032200(1)	-	-	-	-	
Mating connectors							
Standard		4CN1009995	5CON140031	5CON003	-	-	
With rectifier	24VDC	4CN3010240	-	-	-	-	
	48VDC	4CN3010480	-	-	-	-	
	110VDC	4CN3011100	-	-	-	-	
	220VDC	4CN3012200	-	-	-	-	

Notes: (1) supply with AC and use only with rectifier connector - (2) with flying leads - (3) with bidirectional diode - (5) with unidirectional diode
(5) integrated perpendicular type - (6) integrated parallel type

Coils and connectors

BER type

ISO4400 connector

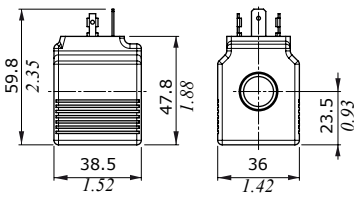

DEUTSCH DT04 connector
(perpendicular type)

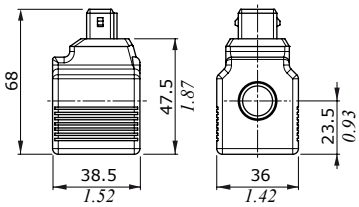

DEUTSCH DT04 connector
(parallel type)

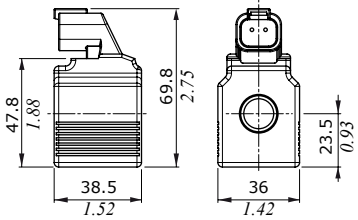

AMP JPT connector

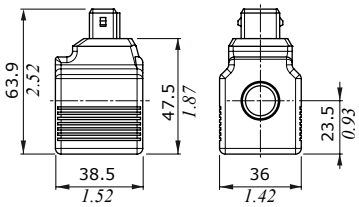

Features

Nominal voltage tolerance : ±10%
Power rating . . . . . : 19.2 W - 10/12/24/48/ 110/220 VDC
: 19 W - 24/110/220 RAC
: 19.2 W - 48 RAC
Max. operating current . . : 1.9 A - 10 VDC
: 1.61 A - 12 VDC
: 0.80 A - 24 VDC
: 0.40 A - 48 VDC
: 0.17 A - 110 VDC
: 0.09 A - 220 VDC
: 0.89 A - 24 RAC
: 0.45 A - 48 RAC
: 0.19 A - 110 RAC
: 0.09 A - 220 RAC
Coil insulance . . . . . : Class H (180°C - *356°F*)
Weather protection . . . . . : IP65 - ISO4400
: IP69K - Deutsch DT
: IP65 - AMP JPT
: IP67 - Weatherpack
: IP67 - Metri-pack
Insertion . . . . . : 100%

Flying leads

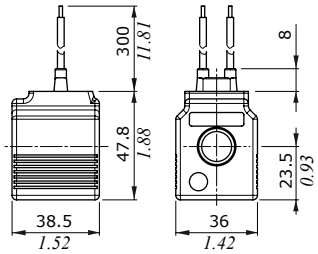

Flying leads with DEUTSCH DT04 connector

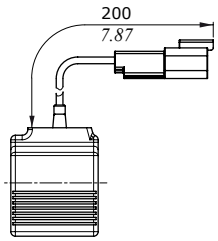

Flying leads with PACKARD WEATHER-PACK connector

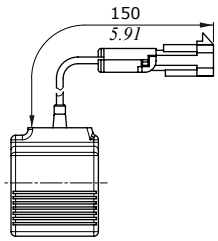

Flying leads with PACKARD METRI-PACK connector

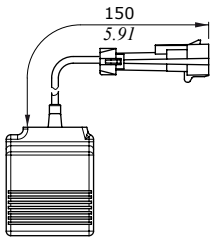

BQP19 type

ISO4400 connector

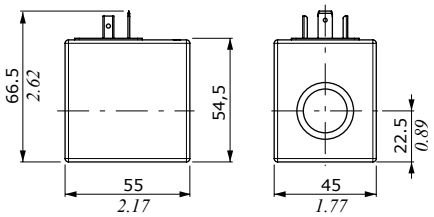

DEUTSCH DT04 connector

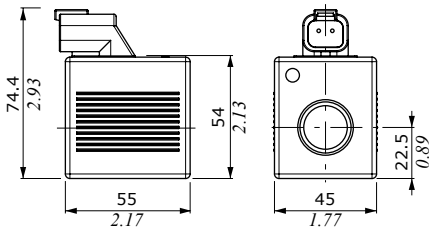

Features

Nominal voltage tolerance : ±10%
Power rating . . . . . : 15 W @ 12 VDC
: 15 W @ 24 VDC
Max. operating current . . : 1.25 A @ 12 VDC
: 0.63 A @ 24VDC
Coil insulance . . . . . : Class H (180°C - *356°F*)
Weather protection . . . . . : IP65 - ISO4400
: IP69K - Deutsch DT
: IP65 - AMP JPT
Insertion . . . . . : 100%

AMP JPT connector

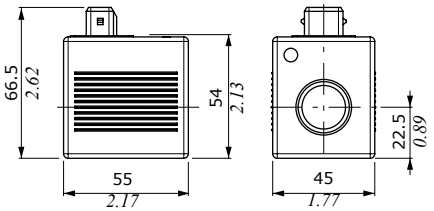

Coils and connectors

BT type

ISO4400 connector

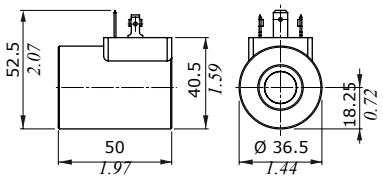

AMP JPT connector

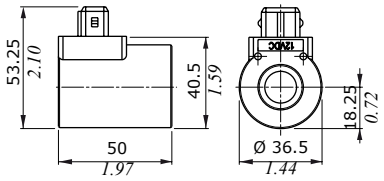

Flying leads

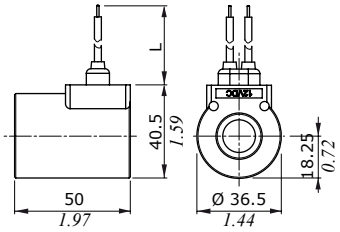

DEUTSCH DT04 connector

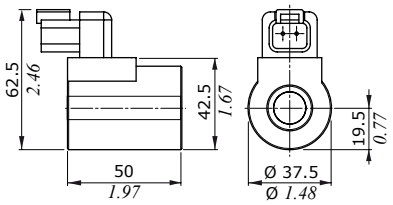

Coil type	Dimension L	
	(mm)	*(in)*
12VDC	247	*9.72*
24VDC	307	*12.09*

Features

Nominal voltage tolerance : ±10%
Power rating . . . . . : 19 W - 10 VDC
: 21 W - 12/24/26 VDC
: 20.3 W - 48 VDC
: 17.3 W - 110 VDC
: 17.7 W - 220 VDC
: 19.9 W - 24 RAC
: 20.7 W - 48 RAC
: 20 W - 110 / 220 RAC
Max. operating current . . : 1.9 A - 10 VDC
: 1.77 A - 12 VDC
: 0.89 A - 24VDC
: 0.84 A - 26 VDC
: 0.43 A - 48 VDC
: 0.16 A - 110 VDC
: 0.08 A - 220 VDC
: 0.93 A - 24 RAC
: 0.47 A - 48 RAC
: 0.18 A - 110 RAC
: 0.09 A - 220 RAC
Coil insulance . . . . . : Class F (155°C - *311°F*)
Weather protection . . . . . : IP65 - ISO4400
: IP69K - Deutsch DT
: IP65 - AMP JPT
: IP67 - Weatherpack
: IP67 - Metri-pack
Insertion . . . . . : 100%

Flying leads with DEUTSCH DT04 connector

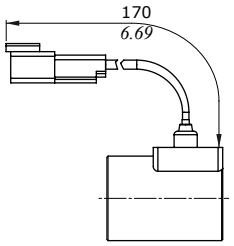

Flying leads with PACKARD WEATHER-PACK connector

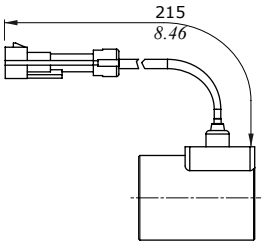

Flying leads with PACKARD METRI-PACK connector

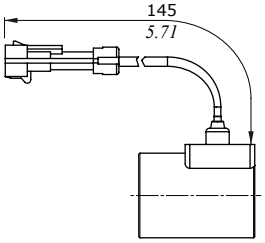

Main rules

The DPC Series valves are assembled and tested as per the technical specifications of this catalogue.
Before the final installation on your equipment, please follow the below recommendations:

- the valve can be assembled in any position; in order to prevent body deformation and spool sticking mount the product on a flat surface;
- In order to prevent the possibility of water entering the spool control kit, do not use high pressure washdown directly on the valve;
- prior to painting, ensure plugs on normally open ports are tightly in place.

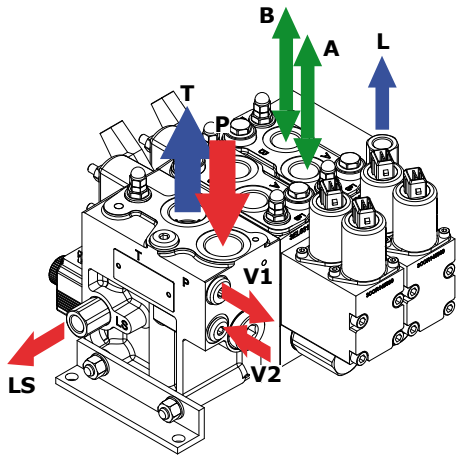

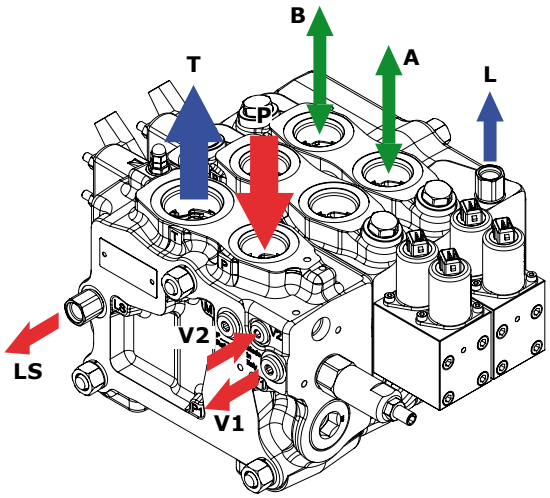

	FITTINGS TIGHTENING TORQUE - Nm / *lbft*						
	THREAD TYPE	**P inlet port**	**A and B workports**	**T outlet port**	**LS signal port V pilot ports***	**L drain port**	**Hydraulic control ports**
DPC130	BSP	G 3/4	G 1/2	G 3/4	G 1/4	G 1/4	G 1/4
	With O-Ring seal	90 / *66.4*	50 / *36.9*	90 / *66.4*	25 / *18.4*	25 / *18.4*	25 / *18.4*
	With copper washer	90 / *66.4*	60 / *44.3*	90 / *66.4*	30 / *22.1*	30 / *22.1*	30 / *22.1*
	With steel and rubber washer	70 / *51.6*	60 / *44.3*	70 / *51.6*	16 / *11.8*	16 / *11.8*	16 / *11.8*
	UN-UNF	1 1/16-12 (SAE 12)	7/8-14 (SAE 10)	1 1/16-12 (SAE 12)	9/16-18 (SAE 6)	9/16-18 (SAE 6)	9/16-18 (SAE 6)
	With O-Ring seal	95 / *70*	50 / *36.9*	95 / *70*	30 / *22.1*	30 / *22.1*	30 / *22.1*
DPC200	BSP	G 1	G 1	G 1-1/4	G 1/4	G 1/4	G 1/4
	With O-Ring seal	120 / *88.5*	120 / *88.5*	190 / *140*	25 / *18.4*	25 / *18.4*	25 / *18.4*
	With copper washer	120 / *88.5*	120 / *88.5*	190 / *140*	30 / *22.1*	30 / *22.1*	30 / *22.1*
	With steel and rubber washer	120 / *88.5*	120 / *88.5*	190 / *140*	16 / *11.8*	16 / *11.8*	16 / *11.8*
	UN-UNF	1 5/16-12 (SAE 16)	1 5/16-12 (SAE 16)	1 5/8-12 (SAE 20)	9/16-18 (SAE 6)	9/16-18 (SAE 6)	7/16-20 (SAE 4)
	With O-Ring seal	150 / *111*	150 / *111*	200 / *147*	30 / *22.1*	30 / *22.1*	18 / *13.3*
	SAE J518 code 61 ISO 6162-1 type 1 [bolts threading]	3/4 [3/8-16 UNC] DN 19 [M10]	3/4 [3/8-16 UNC] DN 19 [M10]	1 [3/8-16 UNC] DN 25 [M10]	-	-	-
	bolts torque; min-max	28-40 / *20.7-29.5*	28-40 / *20.7-29.5*	37-48 / *27.3-35.4*	-	-	-

(*) V2 port is M14x1.5 threading: tightening torque value is the same of G1/4 thread

NOTE – *These torque are recommended. Assembly tightening torque depends on many factors, including lubrication, coating and surface finish.*

Main rules

Series DPC working sections are arranged for external operation of LS signal through dedicated ports on the lower side of sections.
For the maximum permissible pipe length please contact Sales Dpt.

DPC130
working section with
common LS signal

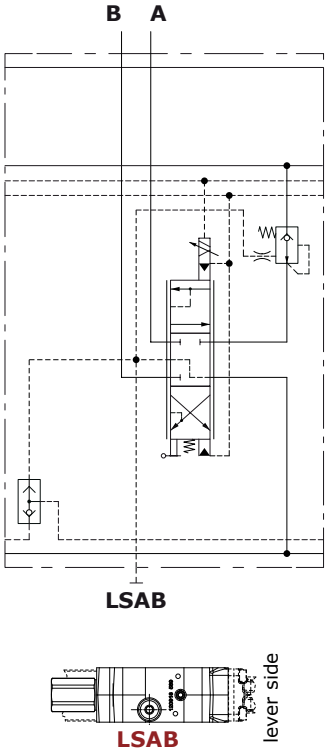

DPC130
working section (only C26)
with independent LS signal

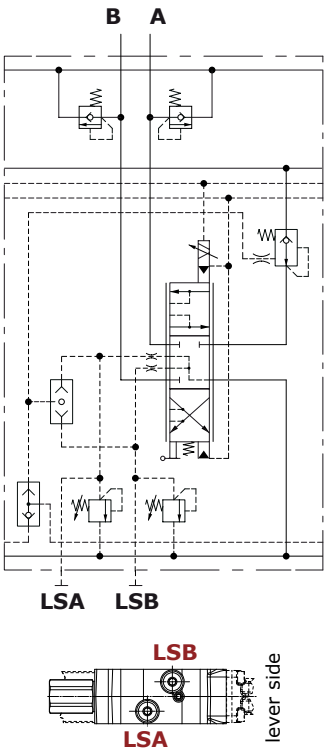

DPC200
working section with
independent LS signal

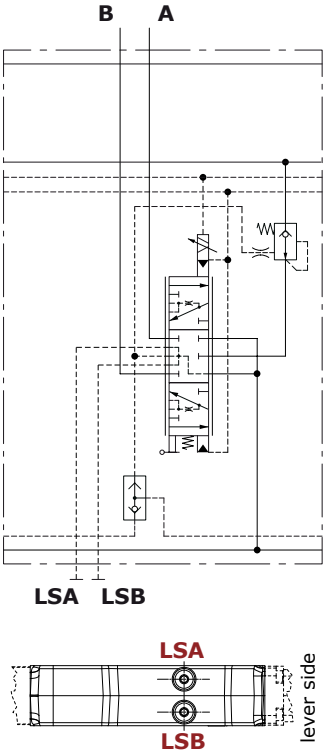

Appendix A

Electrohydraulic controls: hysteresis calculation rule

Hysteresis is calculated as difference between control currents (I_2-I_1), necessary to reach 50% of nominal spool stroke, referred to maximum control current I_{MAX}, necessary to reach 100% of spool stroke.
I_2 is determined on spool stroke increase line, I_1 is determined on spool stroke decrease line.

Example diagram for data detection

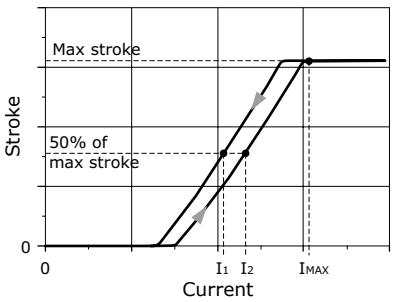

$$\text{Hysteresis } \% = \frac{I_2 - I_1}{I_{MAX}} \times 100$$

Innovation · Continuity · Integration

It is Power

walvoil

FLUID POWER E|MOTION

walvoil hydro control Galtech

D1WWED02E
8th edition November 2019

Walvoil S.P.A. • 42124 Reggio Emilia • Italy • Via Adige, 13/D • Tel.+39.0522.932411 • Fax +39.0522.300984
www.walvoil.com